DAIKIN

SiENBE34-802

R-410A

Service Manual

VRV® III-S

RXYSQ4-5-6PA7Y1B, PA7V1B
R-410A
HEAT Pump 50Hz

VRV® III-S R-410A Heat Pump 50Hz

1. Introduction vi
1.1 Safety Cautions vi
1.2 PREFACE x

Part 1 General Information 1

1. Model Names of Indoor/Outdoor Units 2
2. External Appearance 3
2.1 Indoor Units 3
3. Capacity Range 4

Part 2 Specifications 5

1. Specifications 6
1.1 Outdoor Units 6
1.2 Indoor Units 10

Part 3 List of Electrical and Functional Parts 29

1. List of Electrical and Functional Parts 30
1.1 Outdoor Unit 30
1.2 Indoor Unit 32

Part 4 Refrigerant Circuit 39

1. Refrigerant Circuit 40
1.1 Outdoor Unit 40
2. Functional Parts Layout 44
2.1 RXYSQ4 / 5 / 6PA7Y1B 44
2.2 RXYSQ4 / 5 / 6PA7V1B 45

Part 5 Function 47

1. Operation Mode 48
2. Basic Control 49
2.1 Normal Operation 49
2.2 Compressor PI Control 50
2.3 Electronic Expansion Valve PI Control 51
2.4 Cooling Operation Fan Control 52
3. Special Control 53
3.1 Startup Control 53
3.2 Oil Return Operation 54
3.3 Defrosting Operation 56
3.4 Pump-down Residual Operation 57

3.5 Restart Standby 58
3.6 Stopping Operation 59
4. Protection Control 60
4.1 High Pressure Protection Control 60
4.2 Low Pressure Protection Control 61
4.3 Discharge Pipe Protection Control 62
4.4 Inverter Protection Control 63
5. Other Control 64
5.1 Demand Operation 64
5.2 Heating Operation Prohibition 64
6. Outline of Control (Indoor Unit) 65
6.1 Drain Pump Control 65
6.2 Louver Control for Preventing Ceiling Dirt 67
6.3 Thermostat Sensor in Remote Control 68
6.4 Freeze Prevention 70
6.5 View of Operations of Swing Flaps 71
6.6 Electronic Expansion Valve Control 72
6.7 Hot Start Control (In Heating Operation Only) 72

Part 6 Test Operation 73

1. Test Operation 74
1.1 Procedure and Outline 74
1.2 Operation when Power is Turned On 85
2. Outdoor Unit PC Board Layout 86
3. Field Setting 87
3.1 Field Setting from remote control 87
3.2 Field Setting from Outdoor Unit 104

Part 7 Troubleshooting 123

1. Symptom-based Troubleshooting 125
2. Troubleshooting by Remote Control 128
2.1 The INSPECTION / TEST Button 128
2.2 Self-diagnosis by Wired Remote Control 129
2.3 Self-diagnosis by Wireless Remote Control 130
2.4 Operation of the Remote Control's Inspection / Test Operation Button 132
2.5 Remote Control Service Mode 133
2.6 Remote Control Self-Diagnosis Function 135
3. Troubleshooting by Indication on the Remote Control 142
3.1 "A0" Indoor Unit: Error of External Protection Device 142
3.2 "A1" Indoor Unit: PC Board Defect 143
3.3 "A3" Indoor Unit: Malfunction of Drain Level Control System (S1L) 144
3.4 "A6" Indoor Unit: Fan Motor (M1F) Lock, Overload 146
3.5 "A7" Indoor Unit: Malfunction of Swing Flap Motor (M1S) 147
3.6 Abnormal Power Supply Voltage 149
3.7 "A9" Indoor Unit: Malfunction of Moving Part of Electronic Expansion Valve (Y1E) 150
3.8 "AF" Indoor Unit: Drain Level above Limit 152
3.9 "AJ" Indoor Unit: Malfunction of Capacity Determination Device 153
3.10 "C1" Indoor Unit: Failure of Transmission (Between Indoor unit PC Board and Fan PC Board) 154

3.11 “C4” Indoor Unit: Malfunction of Thermistor (R2T) for Heat Exchanger 156
3.12 “C5” Indoor Unit: Malfunction of Thermistor (R3T) for Gas Pipes 157
3.13 “C6” Indoor Unit: Failure of Combination
(Between Indoor unit PC Board and Fan PC Board).....158
3.14 “C9” Indoor Unit: Malfunction of Thermistor (R1T) for Suction Air 159
3.15 “CA” Indoor Unit: Malfunction of Thermistor for Discharge Air 160
3.16 “CC” Indoor Unit: Malfunction of Humidity Sensor System 161
3.17 “CJ” Indoor Unit: Malfunction of Thermostat Sensor in Remote Control 162
3.18 “E1” Outdoor Unit: PC Board Defect.....163
3.19 “E3” Outdoor Unit: Actuation of High Pressure Switch.....164
3.20 “E4” Outdoor Unit: Actuation of Low Pressure Sensor 166
3.21 “E5” Inverter Compressor Motor Lock.....168
3.22 “E7” Malfunction of Outdoor Unit Fan Motor 169
3.23 “E9” Outdoor Unit: Malfunction of Moving Part of Electronic
Expansion Valve (Y1E, Y3E).....170
3.24 “F3” Outdoor Unit: Abnormal Discharge Pipe Temperature.....172
3.25 “F6” Outdoor Unit: Refrigerant Overcharged 173
3.26 “H9” Outdoor Unit: Malfunction of Thermistor (R1T) for Outdoor Air 174
3.27 “J3” Outdoor Unit: Malfunction of Discharge Pipe Thermistor (R2T)....175
3.28 “J5” Outdoor Unit: Malfunction of Thermistor (R3T, R5T)
for Suction Pipe 1, 2 176
3.29 “J6” Outdoor Unit: Malfunction of Thermistor (R6T).....177
3.30 “J7” Outdoor Unit: Malfunction of Thermistor (R7T) for
Outdoor Unit Liquid Pipe 178
3.31 “J9” Outdoor Unit: Malfunction of Thermistor (R4T).....179
3.32 “JA” Outdoor Unit: Malfunction of High Pressure Sensor 180
3.33 “JC” Outdoor Unit: Malfunction of Low Pressure Sensor 181
3.34 “L1” Outdoor Unit: Malfunction of PC Board 182
3.35 “L4” Outdoor Unit: Malfunction of Inverter Radiating Fin Temperature Rise 183
3.36 “L5” Outdoor Unit: Inverter Compressor Abnormal.....184
3.37 “L8” Outdoor Unit: Inverter Current Abnormal 185
3.38 “L9” Outdoor Unit: Inverter Start up Error 186
3.39 “LC” Outdoor Unit: Malfunction of Transmission between Inverter
and Control PC Board 187
3.40 “P1” Outdoor Unit: High Voltage of Capacitor in Main Inverter Circuit...188
3.41 “U0” Low Pressure Drop Due to Refrigerant Shortage or
Electronic Expansion Valve Failure.....189
3.42 “U2” Power Supply Insufficient or Instantaneous Failure.....191
3.43 “U3” Check Operation not Executed 193
3.44 “U4” Malfunction of Transmission between Indoor Units and Outdoor Units 194
3.45 “U5” Malfunction of Transmission between Remote Control and Indoor Unit 196
3.46 “U8” Malfunction of Transmission between Main and Sub Remote Controls 197
3.47 “U9” Malfunction of Transmission between Indoor and Outdoor
Units in the Same System 198
3.48 “UA” Excessive Number of Indoor Units.....200
3.49 “UC” Address Duplication of Central Remote Control 201
3.50 “UE” Malfunction of Transmission between Central Remote Control
and Indoor Unit.....202
3.51 “UF” System is not Set yet 203
3.52 “UH” Malfunction of System, Refrigerant System Address Undefined ..204

4. Troubleshooting by Indication on the Centralized Remote Control 205
4.1 “UE” Malfunction of Transmission between Centralized Remote Control and Indoor Unit 205
4.2 “M1” PC Board Defect 206
4.3 “M8” Malfunction of Transmission between Optional Controllers for Centralized Control 207
4.4 “MA” Improper Combination of Optional Controllers for Centralized Control 208
4.5 “MC” Address Duplication, Improper Setting.....210
5. Troubleshooting by Indication on the Unified ON/OFF Controller 211
5.1 Operation Lamp Blinks 211
5.2 Display “Under Host Computer Integrate Control” Blinks (Repeats Single Blink).....213
5.3 Display “Under Host Computer Integrate Control” Blinks (Repeats Double Blink) 216

Part 8 Appendix.....221

1. Piping Diagrams.....222
1.1 Outdoor Unit 222
1.2 Indoor Unit.....224
2. Wiring Diagrams.....227
2.1 Outdoor Unit 227
2.2 Field Wiring 229
2.3 Indoor Unit.....231
3. Option List 246
3.1 Option List of Controllers.....246
3.2 Option List of Outdoor Unit.....248
4. Example of connection.....249
5. Thermistor Resistance / Temperature Characteristics 251
6. Pressure Sensor.....253
7. Method of Replacing the Inverter’s Power Transistors Modules 254

Part 9 Precautions for New Refrigerant (R-410A).....257

1. Precautions for New Refrigerant (R-410A).....258
1.1 Outline 258
1.2 Refrigerant Cylinders.....260
1.3 Service Tools.....261

Index i

Drawings & Flow Charts iii

1. Introduction

1.1 Safety Cautions

Cautions and Warnings

- Be sure to read the following safety cautions before conducting repair work.
- The caution items are classified into "⚠ **Warning**" and "⚠ **Caution**". The "⚠ **Warning**" items are especially important since they can lead to death or serious injury if they are not followed closely. The "⚠ **Caution**" items can also lead to serious accidents under some conditions if they are not followed. Therefore, be sure to observe all the safety caution items described below.
- About the pictograms

△ This symbol indicates an item for which caution must be exercised.
The pictogram shows the item to which attention must be paid.

◯ This symbol indicates a prohibited action.
The prohibited item or action is shown inside or near the symbol.

● This symbol indicates an action that must be taken, or an instruction.
The instruction is shown inside or near the symbol.

- After the repair work is complete, be sure to conduct a test operation to ensure that the equipment operates normally, and explain the cautions for operating the product to the customer

1.1.1 Caution in Repair

⚠ **Warning**	
Be sure to disconnect the power cable plug from the plug socket before disassembling the equipment for a repair. Working on the equipment that is connected to a power supply can cause an electrical shook. If it is necessary to supply power to the equipment to conduct the repair or inspecting the circuits, do not touch any electrically charged sections of the equipment.	
If the refrigerant gas discharges during the repair work, do not touch the discharging refrigerant gas. The refrigerant gas can cause frostbite.	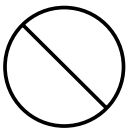
When disconnecting the suction or discharge pipe of the compressor at the welded section, release the refrigerant gas completely at a well-ventilated place first. If there is a gas remaining inside the compressor, the refrigerant gas or refrigerating machine oil discharges when the pipe is disconnected, and it can cause injury.	
If the refrigerant gas leaks during the repair work, ventilate the area. The refrigerant gas can generate toxic gases when it contacts flames.	
The step-up capacitor supplies high-voltage electricity to the electrical components of the outdoor unit. Be sure to discharge the capacitor completely before conducting repair work. A charged capacitor can cause an electrical shock.	
Do not start or stop the air conditioner operation by plugging or unplugging the power cable plug. Plugging or unplugging the power cable plug to operate the equipment can cause an electrical shock or fire.	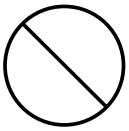

⚠ Caution	
Do not repair the electrical components with wet hands. Working on the equipment with wet hands can cause an electrical shock.	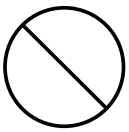
Do not clean the air conditioner by splashing water. Washing the unit with water can cause an electrical shock.	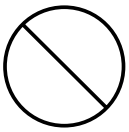
Be sure to provide the grounding when repairing the equipment in a humid or wet place, to avoid electrical shocks.	
Be sure to turn off the power switch and unplug the power cable when cleaning the equipment. The internal fan rotates at a high speed, and cause injury.	
Do not tilt the unit when removing it. The water inside the unit can spill and wet the furniture and floor.	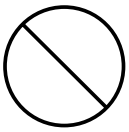
Be sure to check that the refrigerating cycle section has cooled down sufficiently before conducting repair work. Working on the unit when the refrigerating cycle section is hot can cause burns.	
Use the welder in a well-ventilated place. Using the welder in an enclosed room can cause oxygen deficiency.	

1.1.2 Cautions Regarding Products after Repair

⚠ Warning	
Be sure to use parts listed in the service parts list of the applicable model and appropriate tools to conduct repair work. Never attempt to modify the equipment. The use of inappropriate parts or tools can cause an electrical shock, excessive heat generation or fire.	
When relocating the equipment, make sure that the new installation site has sufficient strength to withstand the weight of the equipment. If the installation site does not have sufficient strength and if the installation work is not conducted securely, the equipment can fall and cause injury.	
Be sure to install the product correctly by using the provided standard installation frame. Incorrect use of the installation frame and improper installation can cause the equipment to fall, resulting in injury.	For integral units only
Be sure to install the product securely in the installation frame mounted on a window frame. If the unit is not securely mounted, it can fall and cause injury.	For integral units only
Be sure to use an exclusive power circuit for the equipment, and follow the technical standards related to the electrical equipment, the internal wiring regulations and the instruction manual for installation when conducting electrical work. Insufficient power circuit capacity and improper electrical work can cause an electrical shock or fire.	

Warning	
Be sure to use the specified cable to connect between the indoor and outdoor units. Make the connections securely and route the cable properly so that there is no force pulling the cable at the connection terminals. Improper connections can cause excessive heat generation or fire.	
When connecting the cable between the indoor and outdoor units, make sure that the terminal cover does not lift off or dismount because of the cable. If the cover is not mounted properly, the terminal connection section can cause an electrical shock, excessive heat generation or fire.	
Do not damage or modify the power cable. Damaged or modified power cable can cause an electrical shock or fire. Placing heavy items on the power cable, and heating or pulling the power cable can damage the cable.	
Do not mix air or gas other than the specified refrigerant (R-410A) in the refrigerant system. If air enters the refrigerating system, an excessively high pressure results, causing equipment damage and injury.	
If the refrigerant gas leaks, be sure to locate the leak and repair it before charging the refrigerant. After charging refrigerant, make sure that there is no refrigerant leak. If the leak cannot be located and the repair work must be stopped, be sure to perform pump-down and close the service valve, to prevent the refrigerant gas from leaking into the room. The refrigerant gas itself is harmless, but it can generate toxic gases when it contacts flames, such as fan and other heaters, stoves and ranges.	
When replacing the coin battery in the Remote Control, be sure to disposed of the old battery to prevent children from swallowing it. If a child swallows the coin battery, see a doctor immediately.	

Caution	
Installation of a leakage breaker is necessary in some cases depending on the conditions of the installation site, to prevent electrical shocks.	
Do not install the equipment in a place where there is a possibility of combustible gas leaks. If a combustible gas leaks and remains around the unit, it can cause a fire.	
Be sure to install the packing and seal on the installation frame properly. If the packing and seal are not installed properly, water can enter the room and wet the furniture and floor.	For integral units only

1.1.3 Inspection after Repair

Warning	
Check to make sure that the power cable plug is not dirty or loose, then insert the plug into a power outlet all the way. If the plug has dust or loose connection, it can cause an electrical shock or fire.	
If the power cable and lead wires have scratches or deteriorated, be sure to replace them. Damaged cable and wires can cause an electrical shock, excessive heat generation or fire.	
Do not use a joined power cable or extension cable, or share the same power outlet with other electrical appliances, since it can cause an electrical shock, excessive heat generation or fire.	

Caution	
Check to see if the parts and wires are mounted and connected properly, and if the connections at the soldered or crimped terminals are secure. Improper installation and connections can cause excessive heat generation, fire or an electrical shock.	
If the installation platform or frame has corroded, replace it. Corroded installation platform or frame can cause the unit to fall, resulting in injury.	
Check the grounding, and repair it if the equipment is not properly grounded. Improper grounding can cause an electrical shock.	
Be sure to measure the insulation resistance after the repair, and make sure that the resistance is 1 Mohm or higher. Faulty insulation can cause an electrical shock.	
Be sure to check the drainage of the indoor unit after the repair. Faulty drainage can cause the water to enter the room and wet the furniture and floor.	

1.1.4 Using Icons

Icons are used to attract the attention of the reader to specific information. The meaning of each icon is described in the table below:

1.1.5 Using Icons List

Icon	Type of Information	Description
Note:	Note	A “note” provides information that is not indispensable, but may nevertheless be valuable to the reader, such as tips and tricks.
Caution	Caution	A “caution” is used when there is danger that the reader, through incorrect manipulation, may damage equipment, loose data, get an unexpected result or has to restart (part of) a procedure.
Warning	Warning	A “warning” is used when there is danger of personal injury.
	Reference	A “reference” guides the reader to other places in this binder or in this manual, where he/she will find additional information on a specific topic.

1.2 PREFACE

Thank you for your continued patronage of Daikin products.

This is the new service manual for Daikin's Year 2008 VRVIII-S series Heat Pump System. Daikin offers a wide range of models to respond to building and office air conditioning needs. We are confident that customers will be able to find the models that best suit their needs.

This service manual contains information regarding the servicing of VRVIII-S series R-410A Heat Pump System.

July, 2008

After Sales Service Division

Part 1
General Information

1. Model Names of Indoor/Outdoor Units.....2
2. External Appearance.....3
   2.1 Indoor Units.....3
3. Capacity Range.....4

1. Model Names of Indoor/Outdoor Units

*Indoor Units

Type		Model Name									Power Supply
Ceiling Mounted Cassette Type (Double Flow)	FXCQ	20M	25M	32M	40M	50M	63M	80M	—	125M	V3
Ceiling Mounted Cassette Type (Round Flow)	FXFQ	20P	25P	32P	40P	50P	63P	80P	100P	125P	VE
600×600 Ceiling Mounted Cassette Type (Mult Flow)	FXZQ	20M	25M	32M	40M	50M	—	—	—	—	V1
Ceiling Mounted Cassette Corner Type	FXKQ	—	25MA	32MA	40MA	—	63MA	—	—	—	VE
Slim Ceiling Mounted Duct Type	FXDQ	20P	25P	32P	40NA	50NA	63NA	—	—	—	
	FXDQ-M8	20M8	25M8	—	—	—	—	—	—	—	V3
Ceiling Mounted Built-In Type	FXSQ	20M	25M	32M	40M	50M	63M	80M	100M	125M	V3
Ceiling Mounted Duct Type	FXMQ	—	—	—	40P	50P	63P	80P	100P	125P	VE
Ceiling Suspended Type	FXHQ	—	—	32MA	—	—	63MA	—	100MA	—	
Wall Mounted Type	FXAQ	20MA	25MA	32MA	40MA	50MA	63MA	—	—	—	
Floor Standing Type	FXLQ	20MA	25MA	32MA	40MA	50MA	63MA	—	—	—	
Concealed Floor Standing Type	FXNQ	20MA	25MA	32MA	40MA	50MA	63MA	—	—	—	
Ceiling Suspended Cassette Type	FXUQ	—	—	—	—	—	—	71MA	100MA	125MA	V1
Connection Unit	BEVQ-M(A)	—	—	—	—	—	—	71MA	100MA	125MA	VE

Note: BEV unit is required for FXUQ only.
VE :1ϕ, 220~240V, 50Hz, 1ϕ, 220V, 60Hz
V1 :1ϕ, 220~240V, 50Hz
V3 :1ϕ, 230V, 50Hz

Outdoor Units

Series			Model Name			Power Supply
Inverter	Heat Pump	RXYSQ	4PA	5PA	6PA	Y1, V1

Y1 :3ϕ, 380~415V, 50Hz
V1 :1ϕ, 220~240V, 50Hz

2. External Appearance

2.1 Indoor Units

Ceiling Mounted Cassette Type (Double Flow) FXCQ20M8 FXCQ25M8 FXCQ32M8 FXCQ40M8 FXCQ50M8 FXCQ63M8 FXCQ80M8 FXCQ125M8	Ceiling Mounted Duct Type FXMQ40P FXMQ50P FXMQ63P FXMQ80P FXMQ100P FXMQ125P
Ceiling Mounted Cassette Type (Round Flow) FXFQ20P7 FXFQ25P7 FXFQ32P7 FXFQ40P7 FXFQ50P7 FXFQ63P7 FXFQ80P7 FXFQ100P7 FXFQ125P7	Ceiling Suspended Type FXHQ32MA FXHQ63MA FXHQ100MA
600×600 Ceiling Mounted Cassette Type (Multi Flow) FXZQ20M8 FXZQ25M8 FXZQ32M8 FXZQ40M8 FXZQ50M8	Wall Mounted Type FXAQ20MA FXAQ25MA FXAQ32MA FXAQ40MA FXAQ50MA FXAQ63MA
Ceiling Mounted Cassette Corner Type FXKQ25MA FXKQ32MA FXKQ40MA FXKQ63MA 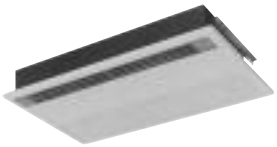	Floor Standing Type FXLQ20MA FXLQ25MA FXLQ32MA FXLQ40MA FXLQ50MA FXLQ63MA
Slim Ceiling Mounted Duct Type FXDQ20P FXDQ25P FXDQ32P FXDQ40NA FXDQ50NA FXDQ63NA 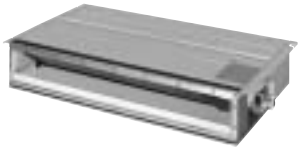	Concealed Floor Standing Type FXNQ20MA FXNQ25MA FXNQ32MA FXNQ40MA FXNQ50MA FXNQ63MA
Ceiling Concealed Type (small) FXDQ20M8 FXDQ25M8	Ceiling Suspended Cassette Type (Connection Unit Series) FXUQ71MA + BEVQ71MA FXUQ100MA + BEVQ100MA FXUQ125MA + BEVQ125MA Connection Unit
Ceiling Mounted Built-In Type FXSQ20M FXSQ25M FXSQ32M FXSQ40M FXSQ50M FXSQ63M FXSQ80M FXSQ100M FXSQ125M	

3. Capacity Range

Outdoor Units

Capacity Range	4HP	5HP	6HP
RXYSQ	4PA	5PA	6PA
No of Indoor Units to be Connected	6	8	9
Total Capacity Index of Indoor Units to be Connected	50~130	62.5~162.5	70~182

Indoor Units

Capacity Range		0.8HP	1HP	1.25HP	1.6HP	2HP	2.5HP	3.2HP	4HP	5HP
Capacity Index		20	25	31.25	40	50	62.5	80	100	125
Ceiling Mounted Cassette Type (Double Flow)	FXCQ	20M	25M	32M	40M	50M	63M	80M	—	125M
Ceiling Mounted Cassette Type (Round Flow)	FXFQ	20P	25P	32P	40P	50P	63P	80P	100P	125P
600×600 Ceiling Mounted Cassette Type (Multi Flow)	FXZQ	20M	25M	32M	40M	50M	—	—	—	—
Ceiling Mounted Cassette Corner Type	FXKQ	—	25MA	32MA	40MA	—	63MA	—	—	—
Slim Ceiling Mounted Duct Type	FXDQ	20P	25P	32P	40NA	50NA	63NA	—	—	—
	FXDQ-M8	20M8	25M8	—	—	—	—	—	—	—
Ceiling Mounted Built-In Type	FXSQ	20M	25M	32M	40M	50M	63M	80M	100M	125M
Ceiling Mounted Duct Type	FXMQ	—	—	—	40P	50P	63P	80P	100P	125P
Ceiling Suspended Type	FXHQ	—	—	32MA	—	—	63MA	—	100MA	—
Wall Mounted Type	FXAQ	20MA	25MA	32MA	40MA	50MA	63MA	—	—	—
Floor Standing Type	FXLQ	20MA	25MA	32MA	40MA	50MA	63MA	—	—	—
Concealed Floor Standing Type	FXNQ	20MA	25MA	32MA	40MA	50MA	63MA	—	—	—
Ceiling Suspended Cassette Type	FXUQ	—	—	—	—	—	—	71MA	100MA	125MA

Part 2
Specifications

1. Specifications 6
1.1 Outdoor Units 6
1.2 Indoor Units 10

1. Specifications

1.1 Outdoor Units

Heat Pump 50Hz <RXYSQ-PA7Y1B>

1-1 TECHNICAL SPECIFICATIONS				RXYSQ4PA7Y1B	RXYSQ5PA7Y1B	RXYSQ6PA7Y1B
Capacity	Cooling		kW	11.2	14.0	15.5
	Heating		kW	12.5	16.0	18.0
COP	Cooling			3.88	3.88	3.33
	Heating			4.43	4.03	3.83
Capacity range			HP	4	5	6
PED category				Category I		
Max n° of indoor units to be connected				6	8	9
Indoor index connection	Minimum			50	62.5	70
	Maximum			130	162.5	182
Casing	Colour			Daikin White		
	Material			Painted galvanised steel		
Dimensions	Packing	Height	mm	1,524		
		Width	mm	980	980	980
		Depth	mm	420	420	420
	Unit	Height	mm	1,345		
		Width	mm	900	900	900
		Depth	mm	320	320	320
Weight	Unit		kg	120	120	120
	Packed Unit		kg	130	130	130
Packing	Material			Carton, wood + EPS		
	Weight		kg	8	8	8
Heat Exchanger	Dimensions	Length	mm	857	857	857
		Nr of Rows		2	2	2
		Fin Pitch	mm	2	2	2
		Nr of Passes		10	10	10
		Face Area	m²	1,131		
		Nr of Stages		60	60	60
	Tube type			Hi-XSS (8)		
	Fin	Fin type		Non-symmetric waffle louvre		
		Treatment		Corrosion resistant		
Fan	Type			Propeller		
	Quantity			2	2	2
	Air Flow Rate (nominal at 230V)	Cooling	m³/min	106	106	106
		Heating	m³/min	102	105	105
	Discharge direction			Horizontal		
	Motor	Quantity		2	2	2
		Model		Brushless DC motor		
Motor	Speed (nominal)	Cooling	rpm	850/815		
		Heating	rpm	820/785	840/805	840/805
Fan	Motor	Drive		Direct drive		
		Output motor	W	70	70	70
Compressor	Quantity			1	1	1
	Motor	Quantity		1	1	1
		Model		JT100G-VDLYR		
		Type		Hermetically sealed scroll compressor		
		Speed	rpm	6,480		
		Motor Output	kW	2.5	3.0	3.5
		Starting Method		Direct on line		
		Crankcase Heater	W	33	33	33
Cooling	Standard	Min	°CDB	-5	-5	-5
Operation Range	Cooling	Max	°CDB	46	46	46
	Heating	Min	°CWB	-20	-20	-20
		Max	°CWB	15.5	15.5	15.5

1-1 TECHNICAL SPECIFICATIONS				RXYSQ4PA7Y1B	RXYSQ5PA7Y1B	RXYSQ6PA7Y1B
Sound level	Cooling	Sound Power (Nominal)	dBA	66	67	69
		Sound Pressure (Nominal)	dBA	50	51	53
	Heating	Sound Pressure (Nominal)	dBA	52	53	55
Refrigerant	Name			R-410A		
	Charge		kg	4.0	4.0	4.0
	Control			Expansion valve (electronic type)		
	Nr of Circuits			1	1	1
Refrigerant Oil	Name			Daphne FVC68D		
	Charged Volume		l	1.5	1.5	1.5
Piping connections	Liquid (OD)	Type		Flare connection		
		Diameter (OD)	mm	9.52	9.52	9.52
	Gas	Type		Flare connection	Flare connection	Braze connection
		Diameter (OD)	mm	15.9	15.9	19.1
	Drain	Quantity		3	3	3
		Diameter (OD)	mm	26 × 3		
	Heat Insulation			Both liquid and gas pipes		
	Max total length		m	300	300	300
Defrost Method				Reversed cycle		
Defrost Control				Sensor for outdoor heat exchanger temperature		
Capacity Control Method				Inverter controlled		
Capacity Control				24 to 100		
Safety devices				HPS, Fan motor thermal protection, Inverter overload protector, PC board fuse		
Standard Accessories				Installation manual, Operation manual		Installation manual, Operation manual, Connection pipes
Notes				Nominal cooling capacities are based on : indoor temperature : 27°CDB, 19°CWB, outdoor temperature : 35°CDB, equivalent refrigerant piping : 5m, level difference : 0m.		
				Nominal heating capacities are based on: indoor temperature: 20°CDB, outdoor temperature: 7°CDB, 6°CWB, equivalent refrigerant piping: 5m, level difference: 0m.		
				Sound power level is an absolute value that a sound source generates.		
				Sound pressure level is a relative value, depending on the distance and acoustic environment. For more details, please refer to sound level drawings.		
				Sound values are measured in a semi-anechoic room.		

Heat pump 50Hz <RXYSQ-PA7V1B>

1-1 TECHNICAL SPECIFICATIONS				RXYSQ4PA7V1B	RXYSQ5PA7V1B	RXYSQ6PA7V1B
Capacity	Cooling		kW	11.2	14.0	15.5
	Heating		kW	12.5	16.0	18.0
COP	Cooling			3.99	3.99	3.42
	Heating			4.56	4.15	3.94
Capacity range			HP	4	5	6
PED category				Category I		
Max n° of indoor units to be connected				6	8	9
Indoor index connection	Minimum			50	62.5	70
	Maximum			130	162.5	182
Casing	Colour			Daikin White		
	Material			Painted galvanised steel		
Dimensions	Packing	Height	mm	1,524		
		Width	mm	980	980	980
		Depth	mm	420	420	420
	Unit	Height	mm	1,345		
		Width	mm	900	900	900
		Depth	mm	320	320	320
Weight	Unit		kg	120	120	120
	Packed Unit		kg	130	130	130
Packing	Material			Carton, wood + EPS		
	Weight		kg	8	8	8
Heat Exchanger	Dimensions	Length	mm	857	857	857
		Nr of Rows		2	2	2
		Fin Pitch	mm	2	2	2
		Nr of Passes		10	10	10
		Face Area	m²	1,131		
		Nr of Stages		60	60	60
	Tube type			Hi-XSS (8)		
	Fin	Fin type		Non-symmetric waffle louvre		
		Treatment		Corrosion resistant		
Fan	Type			Propeller		
	Quantity			2	2	2
	Air Flow Rate (nominal at 230V)	Cooling	m³/min	106	106	106
		Heating	m³/min	102	105	105
	Discharge direction			Horizontal		
	Motor	Quantity		2	2	2
		Model		Brushless DC motor		
Motor	Speed (nominal)	Cooling	rpm	850/815		
		Heating	rpm	820/785	840/805	840/805
Fan	Motor	Drive		Direct drive		
		Output motor	W	70	70	70
Compressor	Quantity			1	1	1
	Motor	Quantity		1	1	1
		Model		JT100G-VDL		
		Type		Hermetically sealed scroll compressor		
		Speed	rpm	6,480		
		Motor Output	kW	2.5	3.0	3.5
		Starting Method		Direct on line		
		Crankcase Heater	W	33	33	33
Cooling	Standard	Min	°CDB	-5	-5	-5
Operation Range	Cooling	Max	°CDB	46	46	46
	Heating	Min	°CWB	-20	-20	-20
		Max	°CWB	15.5	15.5	15.5
Sound Level	Cooling	Sound Power	dBA	66	67	69
		Sound Pressure	dBA	50	51	53
	Heating	Sound Pressure	dBA	52	53	55

1-1 TECHNICAL SPECIFICATIONS				RXYSQ4PA7V1B	RXYSQ5PA7V1B	RXYSQ6PA7V1B
Refrigerant	Name			R-410A		
	Charge		kg	4.0	4.0	4.0
	Control			Expansion valve (electronic type)		
	N× of circuits			1	1	1
Refrigerant Oil	Name			Daphne FVC68D		
	Charged Volume		l	1.5	1.5	1.5
Piping connections	Liquid (OD)	Type		Flare connection		
		Diameter (OD)	mm	9.52	9.52	9.52
	Gas	Type		Flare connection	Flare connection	Braze connection
		Diameter (OD)	mm	15.9	15.9	19.1
	Drain	Quantity		3	3	3
		Diameter (OD)	mm	26 × 3		
	Heat Insulation			Both liquid and gas pipes		
	Max total length		m	300	300	300
Defrost Method				Reversed cycle		
Defrost Control				Sensor for outdoor heat exchanger temperature		
Capacity Control Method				Inverter controlled		
Capacity Control				24 to 100		
Safety devices				HPS, Fan motor thermal protection, Inverter overload protector, PC board fuse		
Standard Accessories				Installation manual, Operation manual		Installation manual, Operation manual, Connection pipes
Notes				Nominal cooling capacities are based on : indoor temperature : 27°CDB, 19°CWB, outdoor temperature : 35°CDB, equivalent refrigerant piping : 5m, level difference : 0m.		
				8 meter 1		
				Sound pressure		
				Sound values		
				Sound values are measured in a semi-anechoic room.		

1.2 Indoor Units

Ceiling Mounted Cassette Type (Double Flow)

1-1 TECHNICAL SPECIFICATIONS				FXCQ20M8V3B	FXCQ25M8V3B	FXCQ32M8V3B	FXCQ40M8V3B	FXCQ50M8V3B
Nominal Capacity	Cooling		kW	2.20	2.80	3.60	4.50	5.60
	Heating		kW	2.50	3.20	4.00	5.00	6.30
Power input (Nominal)	Cooling		kW	0.077	0.092	0.092	0.130	0.130
	Heating		kW	0.044	0.059	0.059	0.097	0.097
Casing	Colour			Non painted				
	Material			Galvanised steel				
Dimensions	Packing	Height	mm	405	405	405	405	405
		Width	mm	1060	1060	1060	1280	1280
		Depth	mm	665	665	665	665	665
	Unit	Height	mm	305	305	305	305	305
		Width	mm	780	780	780	995	995
		Depth	mm	600	600	600	600	600
Weight	Unit		kg	26	26	26	31	32
	Packed Unit		kg	30	30	30	37	38
Required Ceiling Void			mm	350	350	350	350	350
Heat Exchanger	Dimensions	Length	mm	475×2	475×2	475×2	690×2	475×2
		Nr of Rows		2×2				
		Fin Pitch	mm	1.50	1.50	1.50	1.50	1.50
		Nr of Passes		3×2				
		Face Area	m²	0.1×2	0.1×2	0.1×2	0.145×2	0.145×2
		Nr of Stages		10×2				
		Empty Tubeplate Hole					6	
	Tube type			Hi-XSS (7)				
	Fin	Fin type		Symmetric waffle louvre				
		Treatment		Hydrophilic				
Fan	Type			Sirocco fan				
	Quantity			1	1	1	2	2
Air Flow Rate	Cooling	High	m³/min	7.0	9.0	9.0	12.0	12.0
		Low	m³/min	5.0	6.5	6.5	9.0	9.0
	Heating	High	m³/min	7.0	9.0	9.0	12.0	12.0
		Low	m³/min	5.0	6.5	6.5	9.0	9.0
Fan	Motor	Quantity		1	1	1	1	1
		Steps		Phase cut control				
		Output (high)	W	10	15	15	20	20
		Drive		Direct drive				
Refrigerant	Name			R-410A				
Sound Level	Cooling	Sound power (nominal)	dBA	45.0	50.0	50.0	50.0	50.0
Cooling	Sound Pressure	High	dBA	33.0	35.0	35.0	35.5	35.5
		Low	dBA	28.0	29.0	29.0	30.5	30.5
Heating	Sound Pressure	High	dBA	33.0	35.0	35.0	35.5	35.5
		Low	dBA	28.0	29.0	29.0	30.5	30.5
Piping connections	Liquid (OD)	Type		Flare connection				
		Diameter	mm	6.35	6.35	6.35	6.35	6.35
	Gas	Type		Flare connection				
		Diameter	mm	12.7	12.7	12.7	12.7	12.7
	Drain	Diameter	mm	32	32	32	32	32
	Heat Insulation			Both liquid and gas pipes				
Decoration Panel	Model			BYBC32GJW1	BYBC32GJW1	BYBC32GJW1	BYBC50GJW1	BYBC50GJW1
	Colour			White (10Y9/0,5)				
	Dimensions	Height	mm	53	53	53	53	53
		Width	mm	1030	1030	1030	1245	1245
		Depth	mm	680	680	680	680	680
	Weight		kg	8.0	8.0	8.0	8.5	8.5
Drain-up Height			mm	600	600	600	600	600

1-1 TECHNICAL SPECIFICATIONS	FXCQ20M8V3B	FXCQ25M8V3B	FXCQ32M8V3B	FXCQ40M8V3B	FXCQ50M8V3B
Air Filter	Resin net with mold resistance				
Air direction control	Up and downwards				
Refrigerant control	Electronic expansion valve				
Temperature control	Microprocessor thermostat for cooling and heating				
Safety devices	PC board fuse, Fan motor thermal fuse, Drain pump fuse				
Standard Accessories	Screws for fixing the paper pattern for installation, Washer for hanging bracket, Installation and operation manual, Paper pattern for installation, Insulation for fitting, Drain hose				
Notes	Nominal cooling capacities are based on : indoor temperature : 270CDB, 190CWB, outdoor temperature : 350CDB, equivalent refrigerant piping : 8m, level difference : 0m.				
	Nominal heating capacities are based on : indoor temperature : 200CDB, outdoor temperature : 70CDB, 60CWB, equivalent refrigerant piping : 8m, level difference : 0m.				
	Capacities are net, including a deduction for cooling (an addition for heating) for indoor fan motor heat.				

Ceiling Mounted Cassette Type (Double Flow)

1-1 TECHNICAL SPECIFICATIONS				FXCQ63M8V3B	FXCQ80M8V3B	FXCQ125M8V3B
Nominal Capacity	Cooling		kW	7.10	9.00	14.00
	Heating		kW	8.00	10.00	16.00
Power input (Nominal)	Cooling		kW	0.161	0.209	0.256
	Heating		kW	0.126	0.176	0.223
Casing	Colour			Non painted		
	Material			Galvanised steel		
Dimensions	Packing	Height	mm	405	405	405
		Width	mm	1460	1808	1808
		Depth	mm	665	645	645
	Unit	Height	mm	305	305	305
		Width	mm	1180	1670	1670
		Depth	mm	600	600	600
Weight	Unit		kg	35	47	48
	Packed Unit		kg	42	55	56
Required Ceiling Void			mm	350	350	350
Heat Exchanger	Dimensions	Length	mm	875×2	1365	1365
		Nr of Rows		2×2		
		Fin Pitch	mm	1.50	1.50	1.50
		Nr of Passes		6×2	5×2	6
		Face Area	m²	0.184×2	0.287×2	0.287×2
		Nr of Stages		10×2		
		Empty Tubeplate Hole		8		
	Tube type			Hi-XSS (7)		
	Fin	Fin type		Symmetric waffle louvre		
		Treatment		Hydrophilic		
Fan	Type			Sirocco fan		
	Quantity			2	3	3
Air Flow Rate	Cooling	High	m³/min	16.5	26.0	33.0
		Low	m³/min	13.0	21.0	25.0
	Heating	High	m³/min	16.5	26.0	33.0
		Low	m³/min	13.0	21.0	25.0
Fan	Motor	Quantity		1	1	1
		Steps		Phase cut control		
		Output (high)	W	30	50	85
		Drive		Direct drive		
Refrigerant	Name			R-410A		
Sound Level	Cooling	Sound power (nominal)	dBA	52.0	54.0	60.0
Cooling	Sound Pressure	High	dBA	38.0	40.0	45.0
		Low	dBA	33.0	35.0	39.0
Heating	Sound Pressure	High	dBA	38.0	40.0	45.0
		Low	dBA	33.0	35.0	39.0
Piping connections	Liquid (OD)	Type		Flare connection		
		Diameter	mm	9.5	9.5	9.5
	Gas	Type		Flare connection		
		Diameter	mm	15.9	15.9	15.9
	Drain	Diameter	mm	32	32	32
	Heat Insulation			Both liquid and gas pipes		
Decoration Panel	Model			BYBC63GJW1	BYBC125GJW1	BYBC125GJW1
	Colour			White (10Y9/0,5)		
	Dimensions	Height	mm	53	53	53
		Width	mm	1430	1920	1920
		Depth	mm	680	680	680
	Weight		kg	9.5	12.0	12.0
Drain-up Height			mm	600	600	600
Air Filter				Resin net with mold resistance		
Air direction control				Up and downwards		
Refrigerant control				Electronic expansion valve		
Temperature control				Microprocessor thermostat for cooling and heating		
Safety devices				PC board fuse, Fan motor thermal fuse, Drain pump fuse	PC board fuse, Fan motor thermal protector, Drain pump fuse	
Standard Accessories				Screws for fixing the paper pattern for installation, Washer for hanging bracket, Clamps, Installation and operation manual, Paper pattern for installation, Insulation for fitting, Drain hose		
Notes				Nominal cooling capacities are based on : indoor temperature : 27°CDB, 19°CWB, outdoor temperature : 35°CDB, equivalent refrigerant piping : 8m, level difference : 0m.		
				Nominal heating capacities are based on : indoor temperature : 20°CDB, outdoor temperature : 7°CDB, 6°CWB, equivalent refrigerant piping : 8m, level difference : 0m.		
				Capacities are net, including a deduction for cooling (an addition for heating) for indoor fan motor heat.		

Ceiling Mounted Cassette Type (Round-flow)

1-1 TECHNICAL SPECIFICATIONS				FXFQ20P7VEB	FXFQ25P7VEB	FXFQ32P7VEB	FXFQ40P7VEB	FXFQ50P7VEB
Capacity	Cooling		kW	2.2	2.8	3.6	4.5	5.6
	Heating		kW	2.5	3.2	4.0	5.0	6.3
Power Input	Cooling		kW	0.053	0.053	0.053	0.063	0.083
	Heating		kW	0.045	0.045	0.045	0.055	0.067
Casing	Material			Galvanised steel				
Dimensions	Packing	Height	mm	220	220	220	220	220
		Width	mm	882	882	882	882	882
		Depth	mm	882	882	882	882	882
	Unit	Height	mm	204	204	204	204	204
		Width	mm	840	840	840	840	840
		Depth	mm	840	840	840	840	840
Weight	Unit		kg	20.0	20.0	20.0	20.0	21.0
	Packed Unit		kg	24.0	24.0	24.0	24.0	26.0
Dimensions	Length	Inside	mm	2,096				
		Outside	mm	2,152				
Heat Exchanger	Dimensions	Nr of Rows		2	2	2	2	2
		Fin Pitch	mm	1.2	1.2	1.2	1.2	1.2
		Nr of Passes		2	2	3	3	7
		Face Area	m²	0.267	0.267	0.267	0.267	0.357
		Nr of Stages		6	6	6	6	8
		Empty Tubeplate Hole		4	4			
	Fin	Fin type		Cross fin coil (Multi louver fins and Hi-XSS tubes)				
Fan	Type			Turbo fan				
	Quantity			1	1	1	1	1
Air Flow Rate	Cooling	High	m³/min	12.5	12.5	12.5	13.5	15.5
		Low	m³/min	9.0	9.0	9.0	9.0	10.0
	Heating	High	m³/min	12.5	12.5	12.5	13.5	15.0
		Low	m³/min	9.0	9.0	9.0	9.0	9.5
Fan	Motor	Model		QTS48D11M				
		Steps		2	2	2	2	2
		Output (high)	W	56	56	56	56	56
Refrigerant	Name			R-410A				
Sound Level	Cooling	Sound power (nominal)	dBA	49	49	49	50	51
Cooling	Sound Pressure	High	dBA	31	31	31	32	33
		Low	dBA	28	28	28	28	28
Heating	Sound Pressure	High	dBA	31	31	31	32	33
		Low	dBA	28	28	28	28	28
Piping connections	Liquid (OD)	Type		Flare connection				
		Diameter	mm	6.35	6.4	6.4	6.4	6.4
	Gas	Type		Flare connection				
		Diameter	mm	12.7	12.7	12.7	12.7	12.7
	Drain	Diameter	mm	VP25 (I.D. 25/O.D. 32)				
	Heat Insulation			Foamed polystyrene/polyethylene				
	Sound absorbing insulation			(Foamed Polyurethane)				
Decoration Panel	Model			BYCQ140CW1				
	Colour			RAL9010				
	Dimensions	Height	mm	50	50	50	50	50
		Width	mm	950	950	950	950	950
		Depth	mm	950	950	950	950	950
	Weight		kg	5.5	5.5	5.5	5.5	5.5
Air Filter				Resin net with mold resistance				
Standard Accessories				Installation and operation manual, Drain hose, Washer for hanging bracket, Screws, Sealing Pads, Insulation for fitting, Clamp for drain hose, Installation guide, Drain sealing pad				
Notes				The sound pressure values are mentioned for a unit installed with rear suction				
				The sound power level is an absolute value indicating the power wich a sound source generates.				
				Nominal cooling capacities are based on : indoor temperature : 27°CDB, 19°CWB, outdoor temperature : 35°CDB, equivalent refrigerant piping : 5m, level difference : 0m.				
				Nominal heating capacities are based on : indoor temperature : 20°CDB, outdoor temperature : 7°CDB, 6°CWB, equivalent refrigerant piping : 5m (horizontal)				
				Capacities are net, including a deduction for cooling (an addition for heating) for indoor fan motor heat.				

Ceiling Mounted Cassette Type (Round-flow)

1-1 TECHNICAL SPECIFICATIONS				FXFQ63P7VEB	FXFQ80P7VEB	FXFQ100P7VEB	FXFQ125P7VEB
Capacity	Cooling		kW	7.1	9.0	11.2	14.0
	Heating		kW	8.0	10.0	12.5	16.0
Power Input	Cooling		kW	0.095	0.120	0.173	0.258
	Heating		kW	0.114	0.108	0.176	0.246
Casing	Material			Galvanised steel			
Dimensions	Packing	Height	mm	220	262	262	304
		Width	mm	882	882	882	882
		Depth	mm	882	882	882	882
	Unit	Height	mm	204	246	246	288
		Width	mm	840	840	840	840
		Depth	mm	840	840	840	840
Weight	Unit		kg	21.0	24.0	24.0	26.0
	Packed Unit		kg	26.0	28.0	28.0	31.0
Dimensions	Length	Inside	mm	2,096			
		Outside	mm	2,152			
Heat Exchanger	Dimensions	Nr of Rows		2	2	2	2
		Fin Pitch	mm	1.2	1.2	1.2	1.2
		Nr of Passes		7	9	9	11
		Face Area	m²	0.357	0.446	0.446	0.535
		Nr of Stages		8	10	10	12
	Fin	Fin type		Cross fin coil (Multi louver fins and Hi-XSS tubes)			
Fan	Type			Turbo fan			
	Quantity			1	1	1	1
Air Flow Rate	Cooling	High	m³/min	16.5	23.5	26.5	33.0
		Low	m³/min	11.0	14.5	17.0	20.0
	Heating	High	m³/min	17.5	23.5	28.0	33.0
		Low	m³/min	12.0	14.5	17.5	20.0
Fan	Motor	Model		QTS48D11M	QTS48C15M	QTS48C15M	QTS48C15M
		Steps		2	2	2	2
		Output (high)	W	56	120	120	120
Refrigerant	Name			R-410A			
Sound Level	Cooling	Sound power (nominal)	dBA	52	55	58	61
Cooling	Sound Pressure	High	dBA	34	38	41	44
		Low	dBA	29	32	33	34
Heating	Sound Pressure	High	dBA	36	38	42	44
		Low	dBA	30	32	34	34
Piping connections	Liquid (OD)	Type		Flare connection			
		Diameter	mm	9.5	9.5	9.5	9.5
	Gas	Type		Flare connection			
		Diameter	mm	15.9	15.9	15.9	15.9
	Drain	Diameter	mm	VP25 (I.D. 25/O.D. 32)			
	Heat Insulation			Foamed polystyrene/polyethylene			
	Sound absorbing insulation			(Foamed Polyurethane)			
Decoration Panel	Model			BYCQ140CW1			
	Colour			RAL9010			
	Dimensions	Height	mm	50	50	50	50
		Width	mm	950	950	950	950
		Depth	mm	950	950	950	950
	Weight		kg	5.5	5.5	5.5	5.5
Air Filter				Resin net with mold resistance			
Standard Accessories				Installation and operation manual, Drain hose, Washer for hanging bracket, Screws, Sealing Pads, Insulation for fitting, Clamp for drain hose, Installation guide, Drain sealing pad			
Notes				The sound pressure values are mentioned for a unit installed with rear suction			
				The sound power level is an absolute value indicating the power wich a sound source generates.			
				Nominal cooling capacities are based on : indoor temperature : 27°CDB, 19°CWB, outdoor temperature : 35°CDB, equivalent refrigerant piping : 5m, level difference : 0m.			
				Nominal heating capacities are based on : indoor temperature : 20°CDB, outdoor temperature : 7°CDB, 6°CWB, equivalent refrigerant piping : 5m (horizontal)			
				Capacities are net, including a deduction for cooling (an addition for heating) for indoor fan motor heat.			

600×600 Ceiling Mounted Cassette Type (Multi Flow)

1-1 TECHNICAL SPECIFICATIONS				FXZQ20M8V1B	FXZQ25M8V1B	FXZQ32M8V1B	FXZQ40M8V1B	FXZQ50M8V1B
Nominal Capacity	Cooling		kW	2.20	2.80	3.60	4.50	5.60
	Heating		kW	2.50	3.20	4.00	5.00	6.30
Power input (Nominal)	Cooling		kW	0.073	0.073	0.076	0.089	0.115
	Heating		kW	0.064	0.064	0.068	0.080	0.107
Casing	Material			Galvanised steel				
Dimensions	Unit	Height	mm	286	286	286	286	286
		Width	mm	575	575	575	575	575
		Depth	mm	575	575	575	575	575
Weight	Unit		kg	18	18	18	18	18
Heat Exchanger	Dimensions	Nr of Rows		2	2	2	2	2
		Fin Pitch	mm	1.50	1.50	1.50	1.50	1.50
		Face Area	m²	0.269	0.269	0.269	0.269	0.269
		Nr of Stages		10	10	10	10	10
Fan	Type			Turbo fan				
	Quantity			1	1	1	1	1
Air Flow Rate	Cooling	High	m³/min	9.00	9.00	9.50	11.00	14.00
		Low	m³/min	7.00	7.00	7.50	8.00	10.00
Fan	Motor	Quantity		1	1	1	1	1
		Model		QTS32C15M				
		Output (high)	W	55	55	55	55	55
		Drive		Direct drive				
Refrigerant	Name			R-410A				
Sound Level	Cooling	Sound power (nominal)	dBA	47.0	47.0	49.0	53.0	58.0
Cooling	Sound Pressure	High	dBA	30.0	30.0	32.0	36.0	41.0
		Low	dBA	25.0	25.0	26.0	28.0	33.0
Piping connections	Liquid (OD)	Type		Flare connection				
		Diameter	mm	6.4	6.4	6.4	6.4	6.4
	Gas	Type		Flare connection				
		Diameter	mm	12.7	12.7	12.7	12.7	12.7
	Drain	Diameter	mm	26	26	26	26	26
	Heat Insulation			Foamed polystyrene/polyethylene				
Decoration Panel	Model			BYFQ60B7W1				
	Colour			White (Ral 9010)				
	Dimensions	Height	mm	55	55	55	55	55
		Width	mm	700	700	700	700	700
		Depth	mm	700	700	700	700	700
	Weight		kg	2.7	2.7	2.7	2.7	2.7
Air Filter				Resin net with mold resistance				
Refrigerant control				Electronic expansion valve				
Temperature control				Microprocessor thermostat for cooling and heating				
Safety devices				PC board fuse, Fan motor thermal protector				
Standard Accessories				Installation and operation manual, Paper pattern for installation, Drain hose, Clamp metal, Washer fixing plate, Sealing Pads, Clamps, Screws, Washer for hanger bracket, Insulation for fitting				
Notes				Nominal cooling capacities are based on : indoor temperature : 27°CDB, 19°CWB, outdoor temperature : 35°CDB, equivalent refrigerant piping : 7,5m (horizontal)				
				Nominal heating capacities are based on : indoor temperature : 20°CDB, outdoor temperature : 7°CDB, 6°CWB, equivalent refrigerant piping : 7.5m (horizontal)				
				Capacities are net, including a deduction for cooling (an addition for heating) for indoor fan motor heat.				

Ceiling Mounted Cassette Corner Type

1-1 TECHNICAL SPECIFICATIONS				FXKQ25MAVE	FXKQ32MAVE	FXKQ40MAVE	FXKQ63MAVE
Nominal Capacity	Cooling		kW	2.80	3.60	4.50	7.10
	Heating		kW	3.20	4.00	5.00	8.00
Power input (Nominal)	Cooling		kW	0.066	0.066	0.076	0.105
	Heating		kW	0.046	0.046	0.056	0.085
Casing	Material			Galvanised steel			
Dimensions	Unit	Height	mm	215	215	215	215
		Width	mm	1110	1110	1110	1310
		Depth	mm	710	710	710	710
Weight	Unit		kg	31	31	31	34
Heat Exchanger	Dimensions	Nr of Rows		2	2	2	3
		Fin Pitch	mm	1.75	1.75	1.75	1.75
		Face Area	m²	0.180	0.180	0.180	0.226
		Nr of Stages		11	11	11	11
Fan	Type			Sirocco fan			
	Quantity			1	1	1	1
Air Flow Rate	Cooling	High	m³/min	11.00	11.00	13.00	18.00
		Low	m³/min	9.00	9.00	10.00	15.00
Fan	Motor	Quantity		1	1	1	1
		Model		3D12H1AN1V1	3D12H1AN1V1	3D12H1AP1V1	4D12H1AJ1V1
		Output (high)	W	15	15	20	45
		Drive		Direct drive			
Refrigerant	Name			R-410A			
Cooling	Sound Pressure	High	dBA	38.0	38.0	40.0	42.0
		Low	dBA	33.0	33.0	34.0	37.0
Piping connections	Liquid (OD)	Type		Flare connection			
		Diameter	mm	6.4	6.4	6.4	9.5
	Gas	Type		Flare connection			
		Diameter	mm	12.7	12.7	12.7	15.9
	Drain	Diameter	mm	32	32	32	32
	Heat Insulation			Foamed Polyethylene			
Decoration Panel	Model			BYK45FJW1	BYK45FJW1	BYK45FJW1	BYK71FJW1
	Colour			White			
	Dimensions	Height	mm	70	70	70	70
		Width	mm	1240	1240	1240	1440
		Depth	mm	800	800	800	800
	Weight		kg	8.5	8.5	8.5	9.5
Air Filter				Resin net with mold resistance			
Refrigerant control				Electronic expansion valve			
Temperature control				Microprocessor thermostat for cooling and heating			
Safety devices				PC board fuse, Drain pump fuse, Fan motor thermal			
Standard Accessories				Installation and operation manual, Metal clamp for drain hose, Clamps, Insulation for hangar bracket, Positioning Jig for Installation, Paper pattern for installation, Drain hose, Insulation for fitting, Sealing Pads, Screws, Washer, Air Outlet blocking pad			
Notes				Nominal cooling capacities are based on : indoor temperature : 27°CDB, 19°CWB, outdoor temperature : 35°CDB, equivalent refrigerant piping : 7,5m (horizontal)			
				Nominal heating capacities are based on : indoor temperature : 20°CDB, outdoor temperature : 7°CDB, 6°CWB, equivalent refrigerant piping : 7.5m (horizontal)			
				Capacities are net, including a deduction for cooling (an addition for heating) for indoor fan motor heat.			
				Sound pressure levels are measured at 220V			

Slim Ceiling Mounted Duct Type

1-1 TECHNICAL SPECIFICATIONS				FXDQ20PVE	FXDQ25PVE	FXDQ32PVE	FXDQ40NAVE	FXDQ50NAVE	FXDQ63NAVE
Nominal Capacity	Cooling		kW	2.20	2.80	3.60	4.50	5.60	7.10
	Heating		kW	2.50	3.20	4.00	5.00	6.30	8.00
Power input (Nominal)	Cooling		kW	0.086	0.086	0.089	0.160	0.165	0.181
	Heating		kW	0.067	0.067	0.070	0.147	0.152	0.168
Casing	Material			Galvanised steel plate					
Dimensions	Unit	Height	mm	200	200	200	200	200	200
		Width	mm	700	700	700	900	900	1100
		Depth	mm	620	620	620	620	620	620
Weight	Unit		kg	23.0	23.0	23.0	27.0	28.0	31.0
Heat Exchanger	Dimensions	Nr of Rows		2	2	3	3	3	3
		Fin Pitch	mm	1.50	1.50	1.50	1.50	1.50	1.50
		Face Area	m²	0.126	0.126	0.126	0.176	0.176	0.227
		Nr of Stages		12	12	12	12	12	12
	Fin	Fin type		Cross fin coil					
Fan	Type			Sirocco fan					
	Quantity			1	1	1	1	1	1
Air Flow Rate	Cooling	High	m³/min	8.0	8.0	8.0	10.50	12.50	16.50
		Low	m³/min	6.4	6.4	6.4	8.50	10.00	13.00
Fan	External static pressure	High	Pa	30	30	30	44	44	44
		Standard	Pa	10	10	10	15	15	15
	Motor	Output (high)	W	62	62	62	62	130	130
		Drive		Direct drive					
Refrigerant	Name			R-410A					
Cooling	Sound Pressure	High	dBA	33.0	33.0	33.0	34.0	35.0	36.0
		Low	dBA	29.0	29.0	29.0	30.0	31.0	32.0
Piping connections	Liquid (OD)	Type		Flare connection					
		Diameter	mm	6.4	6.4	6.4	6.4	6.4	9.5
	Gas	Type		Flare connection					
		Diameter	mm	12.7	12.7	12.7	12.7	12.7	15.9
	Drain	Diameter	mm	VP20 (I.D. 20/O.D. 26)					
Air Filter				Removable/washable/Mildew proof					
Refrigerant control				Electronic expansion valve					
Temperature control				Microprocessor thermostat for cooling and heating					
Safety devices				Fuse, Fan motor thermal protector					
Standard Accessories				Installation and operation manual, Drain hose, Sealing Pads, Clamps, Washer, Insulation for fitting, Clamp metal, Washer fixing plate, Screws for duct flanges, Air filter					
Notes				Nominal cooling capacities are based on : indoor temperature : 27°CDB, 19°CWB, outdoor temperature : 35°CDB, equivalent refrigerant piping : 7,5m (horizontal)					
				Nominal heating capacities are based on : indoor temperature : 20°CDB, outdoor temperature : 7°CDB, 6°CWB, equivalent refrigerant piping : 7.5m (horizontal)					
				Capacities are net, including a deduction for cooling (an addition for heating) for indoor fan motor heat.					
				External static pressure can be changed by the remote control.					
				The operation sound levels are conversion values in anechoic chamber. In practice, sound levels tend to be higher than the specified values due to ambient noise or reflection. When the suction place is changed to bottom suction, sound level will increase by approximately 5dBA.					

Slim Ceiling Mounted Duct Type (with Drain Pump)

1-1 TECHNICAL SPECIFICATIONS				FXDQ20M8V3B	FXDQ25M8V3B
Nominal Capacity	Cooling		kW	2.20	2.80
	Heating		kW	2.50	3.20
Power input (Nominal)	Cooling		kW	0.050	0.050
	Heating		kW	0.050	0.050
Casing	Colour			Non painted	
	Material			Galvanised steel	
Dimensions	Packing	Height	mm	301	301
		Width	mm	584	584
		Depth	mm	753	753
	Unit	Height	mm	230	230
		Width	mm	502	502
		Depth	mm	652	652
Weight	Unit		kg	17	17
	Packed Unit		kg	18	18
Required Ceiling Void			mm	250	250
Heat Exchanger	Dimensions	Length	mm	430	430
		Nr of Rows		2	2
		Fin Pitch	mm	1.40	1.40
		Nr of Passes		2	2
		Face Area	m²	0.108	0.108
		Nr of Stages		12	12
		Empty Tubeplate Hole		4	
	Tube type			Hi-XSS (7)	
	Fin	Fin type		Symmetric waffle louvre	
		Treatment		Hydrophilic	
Fan	Type			Sirocco fan	
	Quantity			1	1
Air Flow Rate	Cooling	High	m³/min	6.70	7.40
		Low	m³/min	5.20	5.80
	Heating	High	m³/min	6.70	7.40
		Low	m³/min	5.20	5.80
Fan	Motor	Quantity		1	1
		Steps		step motor	
		Output (high)	W	10	10
		Drive		Direct drive	
Refrigerant	Name			R-410A	
Sound Level	Cooling	Sound power (nominal)	dBA	50.0	50.0
Cooling	Sound Pressure	High	dBA	37.0	37.0
		Low	dBA	32.0	32.0
Heating	Sound Pressure	High	dBA	37.0	37.0
		Low	dBA	32.0	32.0
Piping connections	Liquid (OD)	Type		Flare connection	
		Diameter	mm	6.4	6.4
	Gas	Type		Flare connection	
		Diameter	mm	12.7	12.7
	Drain	Diameter	mm	27.2	27.2
Air Filter				Resin net with mold resistance	
Air direction control				Up and downwards	
Refrigerant control				Electronic expansion valve	
Temperature control				Microprocessor thermostat for cooling and heating	
Safety devices				PC board fuse, Fan motor thermal protector	
Standard Accessories				Installation and operation manual, Fuse, Caution for servicing sticker, Suction air filter	
Notes				Nominal cooling capacities are based on : indoor temperature : 27°CDB, 19°CWB, outdoor temperature : 35°CDB, equivalent refrigerant piping : 8m, level difference : 0m.	
				Nominal heating capacities are based on : indoor temperature : 20°CDB, outdoor temperature : 7°CDB, 6°CWB, equivalent refrigerant piping : 8m, level difference : 0m.	
				Capacities are net, including a deduction for cooling (an addition for heating) for indoor fan motor heat.	

Ceiling Mounted Built-in Type

1-1 TECHNICAL SPECIFICATIONS				FXSQ20M8V3B	FXSQ25M8V3B	FXSQ32M8V3B	FXSQ40M8V3B	FXSQ50M8V3B
Capacity (Conditions specified in 1)	Cooling		kW	2.20	2.80	3.60	4.50	5.60
	Heating		kW	2.50	3.20	4.00	5.00	6.30
Power input (Nominal)	Cooling		kW	0.110	0.110	0.114	0.127	0.143
	Heating		kW	0.090	0.090	0.094	0.107	0.123
Casing	Colour			Non painted				
	Material			Galvanised steel				
Dimensions	Packing	Height	mm	354	354	354	354	354
		Width	mm	742	742	742	892	892
		Depth	mm	936	936	936	936	936
	Unit	Height	mm	300	300	300	300	300
		Width	mm	550	550	550	700	700
		Depth	mm	800	800	800	800	800
Weight	Unit		kg	30	30	30	30	31
	Packed Unit		kg	34	34	34	34	35
Required Ceiling Void			mm	350	350	350	350	350
Heat Exchanger	Dimensions	Length	mm	300	300	300	450	450
		Nr of Rows		3	3	3	3	3
		Fin Pitch	mm	1.75	1.75	1.75	1.75	1.75
		Nr of Passes		3	3	3	4	4
		Face Area	m²	0.088	0.088	0.088	0.132	0.132
		Nr of Stages		14	14	14	14	14
		Empty Tubeplate Hole		14				
	Tube type			Hi-XSS (7)				
	Fin	Fin type		Symmetric waffle louvre				
		Treatment		Hydrophilic				
Fan	Type			Sirocco fan				
	Quantity			1	1	1	1	1
Air Flow Rate	Cooling	High	m³/min	9.00	9.00	9.50	11.50	15.00
		Low	m³/min	6.50	6.50	7.00	9.00	11.00
	Heating	High	m³/min	9.00	9.00	9.50	11.50	15.00
		Low	m³/min	6.50	6.50	7.00	9.00	11.00
Fan	External static pressure	High	Pa	125	125	104	116	136
		Standard	Pa	105	105	88	98	114
		Low	Pa	96	96	78	85	99
	Motor	Quantity		1	1	1	1	1
		Model		D18H3AA1V1	D18H3AA1V1	D18H3AA1V1	D18H2AC1V1	D18H2AB1V1
		Steps		step motor				
		Output (high)	W	50	50	50	65	85
		Drive		Direct drive				
Refrigerant	Name			R-410A				
Sound Level	Cooling	Sound power (nominal)	dBA	50.0	50.0	51.0	56.0	58.0
Cooling	Sound Pressure	High	dBA	32.0	32.0	33.0	33.0	35.0
		Low	dBA	28.0	28.0	28.0	29.0	31.0
Heating	Sound Pressure	High	dBA	32.0	32.0	33.0	33.0	35.0
		Low	dBA	28.0	28.0	28.0	29.0	31.0
Piping connections	Liquid (OD)	Type		Flare connection				
		Diameter	mm	6.35	6.35	6.35	6.35	6.35
	Gas	Type		Flare connection				
		Diameter	mm	12.7	12.7	12.7	12.7	12.7
	Drain	Diameter	mm	32	32	32	32	32
	Heat Insulation			Both liquid and gas pipes				
Decoration Panel	Model			BYBS32DJW1	BYBS32DJW1	BYBS32DJW1	BYBS45DJW1	BYBS45DJW1
	Colour			White (10Y9/0,5)				
	Dimensions	Height	mm	55	55	55	55	55
		Width	mm	650	650	650	800	800
		Depth	mm	500	500	500	500	500
	Weight		kg	3	3	3	3.5	3.5
Drain-up Height			mm	600	600	600	600	600
Air Filter				Resin net with mold resistance				
Air direction control				Up and downwards				
Refrigerant control				Electronic expansion valve				
Temperature control				Microprocessor thermostat for cooling and heating				
Safety devices				PC board fuse, Drain pump fuse, Fan motor thermal fuse				
Standard Accessories				Metal clamp for drain hose, Paper pattern for installation, Drain hose, Insulation for fitting, Washer for hanger bracket, Screws for duct flanges, Screws for fixing the paper pattern for installation, Fuse, Installation and operation manual				
Notes				Nominal cooling capacities are based on : indoor temperature : 27°CDB, 19°CWB, outdoor temperature : 35°CDB, equivalent refrigerant piping : 8m, level difference : 0m.				
				Nominal heating capacities are based on : indoor temperature : 20°CDB, outdoor temperature : 7°CDB, 6°CWB, equivalent refrigerant piping : 8m, level difference : 0m.				
				The external static pressure is changeable : change the connectors inside the electrical box, this pressure means : High static pressure -standard - low static pressure				
				The external static pressure is changeable : change the connectors inside the electrical box, this pressure means : High static pressure -standard				
				Capacities are net, including a deduction for cooling (an addition for heating) for indoor fan motor heat.				
				The sound pressure values are mentioned for a unit installed with rear suction				

Ceiling Mounted Built-in Type

1-1 TECHNICAL SPECIFICATIONS				FXSQ63M8V3B	FXSQ80M8V3B	FXSQ100M8V3B	FXSQ125M8V3B
Capacity (Conditions specified in 1)	Cooling		kW	7.10	9.00	11.20	14.00
	Heating		kW	8.00	10.00	12.50	16.00
Power input (Nominal)	Cooling		kW	0.189	0.234	0.242	0.321
	Heating		kW	0.169	0.214	0.222	0.301
Casing	Colour			Non painted			
	Material			Galvanised steel			
Dimensions	Packing	Height	mm	354	356	356	356
		Width	mm	1192	1596	1596	1596
		Depth	mm	936	938	938	938
	Unit	Height	mm	300	300	300	300
		Width	mm	1000	1400	1400	1400
		Depth	mm	800	800	800	800
Weight	Unit		kg	41	51	51	52
	Packed Unit		kg	47	58	58	59
Required Ceiling Void			mm	350	350	350	350
Heat Exchanger	Dimensions	Length	mm	750	1150	1150	1150
		Nr of Rows		3	3	3	3
		Fin Pitch	mm	1.75	1.75	1.75	1.75
		Nr of Passes		7	10	10	10
		Face Area	m²	0.221	0.338	0.338	0.338
		Nr of Stages		14	14	14	14
	Tube type			Hi-XSS (7)			
	Fin	Fin type		Symmetric waffle louvre			
		Treatment		Hydrophilic			
Fan	Type			Sirocco fan			
	Quantity			2	3	3	3
Air Flow Rate	Cooling	High	m³/min	21.00	27.00	28.00	38.00
		Low	m³/min	15.50	20.00	20.50	28.00
	Heating	High	m³/min	21.00	27.00	28.00	38.00
		Low	m³/min	15.50	20.00	20.50	28.00
Fan	External static pressure	High	Pa	123	141	141	109
		Standard	Pa	111	125	125	93
		Low	Pa	98			
	Motor	Quantity		1	1	1	1
		Model		2D18H2AB1V1	3D18H2AH1V1	3D18H2AH1V1	3D18H2AG1V1
		Steps		step motor			
		Output (high)	W	125	135	135	225
		Drive		Direct drive			
Refrigerant	Name			R-410A			
Sound Level	Cooling	Sound power (nominal)	dBA	56.0	55.0	56.0	65.0
Cooling	Sound Pressure	High	dBA	35.0	37.0	38.0	40.0
		Low	dBA	30.0	31.0	33.0	35.0
Heating	Sound Pressure	High	dBA	35.0	37.0	38.0	40.0
		Low	dBA	30.0	31.0	33.0	35.0
Piping connections	Liquid (OD)	Type		Flare connection			
		Diameter	mm	9.5	9.5	9.5	9.5
	Gas	Type		Flare connection			
		Diameter	mm	15.9	15.9	15.9	15.9
	Drain	Diameter	mm	32	32	32	32
	Heat Insulation			Both liquid and gas pipes			
Decoration Panel	Model			BYBS71DJW1	BYBS125DJW1	BYBS125DJW1	BYBS125DJW1
	Colour			White (10Y9/0,5)			
	Dimensions	Height	mm	55	55	55	55
		Width	mm	1100	1500	1500	1500
		Depth	mm	500	500	500	500
	Weight		kg	4.5	6.5	6.5	6.5
Drain-up Height			mm	600	600	600	600
Air Filter				Resin net with mold resistance			
Air direction control				Up and downwards			
Refrigerant control				Electronic expansion valve			
Temperature control				Microprocessor thermostat for cooling and heating			
Safety devices				PC board fuse, Drain pump fuse, Fan motor thermal fuse	PC board fuse, Drain pump fuse, Fan motor thermal protector		
Standard Accessories				Metal clamp for drain hose, Paper pattern for installation, Drain hose, Insulation for fitting, Washer for hanger bracket, Screws for duct flanges, Screws for fixing the paper pattern for installation, Fuse, Installation and operation manual			
Notes				Nominal cooling capacities are based on : indoor temperature : 27°CDB, 19°CWB, outdoor temperature : 35°CDB, equivalent refrigerant piping : 8m, level difference : 0m.			
				Nominal heating capacities are based on : indoor temperature : 20°CDB, outdoor temperature : 7°CDB, 6°CWB, equivalent refrigerant piping : 8m, level difference : 0m.			
				The external static pressure is changeable : change the connectors inside the electrical box, this pressure means : High static pressure -standard - low static pressure			
				The external static pressure is changeable : change the connectors inside the electrical box, this pressure means : High static pressure -standard			
				Capacities are net, including a deduction for cooling (an addition for heating) for indoor fan motor heat.			
				The sound pressure values are mentioned for a unit installed with rear suction			

Ceiling Mounted Duct Type

1-1 TECHNICAL SPECIFICATIONS				FXMQ40PVE	FXMQ50PVE	FXMQ63PVE	FXMQ80PVE	FXMQ100PVE	FXMQ125PVE
Capacity	Cooling		kW	4.5	5.6	7.1	9.0	11.2	14.0
	Heating		kW	5.0	6.3	8.0	10.0	12.5	16.0
Power Input	Cooling		kW	0.194 (1) 0.193 (2)	0.215 (1) 0.214 (2)	0.230 (1) 0.229 (2)	0.298 (1) 0.297 (2)	0.376 (1) 0.375 (2)	0.461 (1) 0.460 (2)
	Heating		kW	0.182	0.203	0.218	0.286	0.364	0.449
Casing	Material			Galvanised steel plate					
Dimensions	Unit	Height	mm	300	300	300	300	300	300
		Width	mm	700	1,000	1,000	1,000	1,400	1,400
		Depth	mm	700	700	700	700	700	700
Weight	Unit		kg	28	36	36	36	46	46
Heat Exchanger	Dimensions	Nr of Rows		3	3	3	3	3	3
		Fin Pitch	mm	1.75	1.75	1.75	1.75	1.75	1.75
		Face Area	m²	0.148	0.249	0.249	0.249	0.383	0.383
		Nr of Stages		16	16	16	16	16	16
Fan	Type			Sirocco fan					
Air Flow Rate	Cooling	High high	m³/min	16	18	19.5	25	32	39
		High	m³/min	13	16.5	17.5	22.5	27	33
		Low	m³/min	11	15	16	20	23	28
Fan	External static pressure	High	Pa	160	200	200	200	200	200
		Standard	Pa	100	100	100	100	100	100
		Low	Pa	30	50	50	50	50	50
	Motor	Output (high)	W	140	350	350	350	350	350
		Drive		Direct drive					
Piping connections	Liquid (OD)	Type		Flare connection					
		Diameter	mm	6.35	9.52	9.52	9.52	9.52	9.52
	Gas	Type		Flare connection					
		Diameter	mm	12.7	15.9	15.9	15.9	15.9	15.9
	Drain	Diameter	mm	VP25 (I.D. 32/O.D. 25)					
Refrigerant control				Electronic expansion valve					
Temperature control				Microprocessor thermostat for cooling and heating					
Safety devices				Fuse, Fan driver overload protector					
Standard Accessories				Operation manual, Installation manual, Drain hose, Sealing pads, Clamps, Washer, Screws, Insulation for fitting, Clamp metal, Air discharge flange, Air suction flange					
Notes				Nominal cooling capacities are based on following conditions: return air temperature: 27°CDB/19°CWB; outdoor temperature: 35°CDB; standard external static pressure: 100Pa; equivalent refrigerant piping: 7.5m (horizontal)					
				Nominal heating capacities are based on following conditions: return air temperature: 20°CDB; outdoor temperature: 7°CDB/6°CWB; standard external static pressure: 100Pa; equivalent refrigerant piping: 7.5m (horizontal)					
				Capacities are net, including a deduction for cooling (an addition for heating) for indoor fan motor heat.					
				External static pressure is changeable in 13 or 14 stages within the ( ) range by the remote control.					
				Air filter is not standard accessory, but please mount it in the duct system of the suction side. Select its colorimetric method(gravity method) 50% or more.					

Ceiling Suspended Type

1-1 TECHNICAL SPECIFICATIONS				FXHQ32MAVE	FXHQ63MAVE	FXHQ100MAVE
Nominal Capacity	Cooling		kW	3.60	7.10	11.20
	Heating		kW	4.00	8.00	12.50
Power input (Nominal)	Cooling		kW	0.111	0.115	0.135
	Heating		kW	0.111	0.115	0.135
Casing	Colour			White (10Y9/0,5)		
Dimensions	Unit	Height	mm	195	195	195
		Width	mm	960	1160	1400
		Depth	mm	680	680	680
Weight	Unit		kg	24	28	33
Heat Exchanger	Dimensions	Nr of Rows		2	3	3
		Fin Pitch	mm	1.75	1.75	1.75
		Face Area	m²	0.182	0.233	0.293
		Nr of Stages		12	12	12
Fan	Type			Sirocco fan		
	Quantity			1	1	1
Air Flow Rate	Cooling	High	m³/min	12.00	17.50	25.00
		Low	m³/min	10.00	14.00	19.50
Fan	Motor	Quantity		1	1	1
		Model		3D12K1AA1	4D12K1AA1	3D12K2AA1
		Output (high)	W	62	62	130
		Drive		Direct drive		
Refrigerant	Name			R-410A		
Cooling	Sound Pressure	High	dBA	36.0	39.0	45.0
		Low	dBA	31.0	34.0	37.0
Piping connections	Liquid (OD)	Type		Flare connection		
		Diameter	mm	6.4	9.5	9.5
	Gas	Type		Flare connection		
		Diameter	mm	12.7	15.9	15.9
	Drain	Diameter	mm	26	26	26
	Heat Insulation			Glass wool		
Air Filter				Resin net with mold resistance		
Refrigerant control				Electronic expansion valve		
Temperature control				Microprocessor thermostat for cooling and heating		
Safety devices				PC board fuse, Fan motor thermal protector		
Standard Accessories				Installation and operation manual, Drain hose, Paper pattern for installation, Clamp metal, Insulation for fitting Clamps, Washer		
Notes				Nominal cooling capacities are based on : indoor temperature : 27°CDB, 19°CWB, outdoor temperature : 35°CDB, equivalent refrigerant piping : 7,5m (horizontal)		
				Nominal heating capacities are based on : indoor temperature : 20°CDB, outdoor temperature : 7°CDB, 6°CWB, equivalent refrigerant piping : 7.5m (horizontal)		
				Capacities are net, including a deduction for cooling (an addition for heating) for indoor fan motor heat.		

Wall Mounted Type

1-1 TECHNICAL SPECIFICATIONS				FXAQ20MAVE	FXAQ25MAVE	FXAQ32MAVE	FXAQ40MAVE	FXAQ50MAVE	FXAQ63MAVE
Nominal Capacity	Cooling		kW	2.20	2.80	3.60	4.50	5.60	7.10
	Heating		kW	2.50	3.20	4.00	5.00	6.30	8.00
Power input (Nominal)	Cooling		kW	0.016	0.022	0.027	0.020	0.027	0.050
	Heating		kW	0.024	0.027	0.032	0.020	0.032	0.060
Casing	Colour			white (3.0Y8.5/0.5)					
Dimensions	Unit	Height	mm	290	290	290	290	290	290
		Width	mm	795	795	795	1050	1050	1050
		Depth	mm	230	230	230	230	230	230
Weight	Unit		kg	11	11	11	14	14	14
Heat Exchanger	Dimensions	Nr of Rows		2	2	2	2	2	2
		Fin Pitch	mm	1.40	1.40	1.40	1.40	1.40	1.40
		Face Area	m²	0.161	0.161	0.161	0.213	0.213	0.213
		Nr of Stages		14	14	14	14	14	14
Fan	Type			Cross flow fan					
	Quantity			1	1	1	1		
Air Flow Rate	Cooling	High	m³/min	7.50	8.00	9.00	12.00	15.00	19.00
		Low	m³/min	4.50	5.00	5.50	9.00	12.00	14.00
Fan	Motor	Quantity		1	1	1	1	1	1
		Model		QCL9661M	QCL9661M	QCL9661M	QCL9686M	QCL9686M	QCL9686M
		Output (high)	W	40	40	40	43	43	43
		Drive		Direct drive					
Refrigerant	Name			R-410A					
Cooling	Sound Pressure	High	dBA	35.0	36.0	37.0	39.0	42.0	46.0
		Low	dBA	29.0	29.0	29.0	34.0	36.0	39.0
Piping connections	Liquid (OD)	Type		Flare connection					
		Diameter	mm	6.4	6.4	6.4	6.4	6.35	9.5
	Gas	Type		Flare connection					
		Diameter	mm	12.7	12.7	12.7	12.7	12.7	15.9
	Drain	Diameter	mm	18	18	18	18	18	18
	Heat Insulation			Foamed polystyrene/polyethylene					
Air Filter				Washable resin net					
Refrigerant control				Electronic expansion valve					
Temperature control				Microprocessor thermostat for cooling and heating					
Safety devices				PC board fuse					
Standard Accessories				Installation and operation manual, Installation panel, Paper pattern for installation, Insulation tape, Clamps, Screws					
Notes				Nominal cooling capacities are based on : indoor temperature : 27°CDB, 19°CWB, outdoor temperature : 35°CDB, equivalent refrigerant piping : 5m (horizontal)					
				Nominal heating capacities are based on : indoor temperature : 20°CDB, outdoor temperature : 7°CDB, 6°CWB, equivalent refrigerant piping : 5m (horizontal)					
				Capacities are net, including a deduction for cooling (an addition for heating) for indoor fan motor heat.					

Floor Standing Type

1-1 TECHNICAL SPECIFICATIONS				FXLQ20MAVE	FXLQ25MAVE	FXLQ32MAVE	FXLQ40MAVE	FXLQ50MAVE	FXLQ63MAVE
Nominal Capacity	Cooling		kW	2.20	2.80	3.60	4.50	5.60	7.10
	Heating		kW	2.50	3.20	4.00	5.00	6.30	8.00
Power input (Nominal)	Cooling		kW	0.049	0.049	0.090	0.090	0.110	0.110
	Heating		kW	0.049	0.049	0.090	0.090	0.110	0.110
Casing	Colour			Ivory white (5Y7,5/1)					
Dimensions	Unit	Height	mm	600	600	600	600	600	600
		Width	mm	1000	1000	1140	1140	1420	1420
		Depth	mm	222	222	222	222	222	222
Weight	Unit		kg	25	25	30	30	36	36
Heat Exchanger	Dimensions	Nr of Rows		3	3	3	3	3	3
		Fin Pitch	mm	1.50	1.50	1.50	1.50	1.50	1.50
		Face Area	m²	0.159	0.159	0.200	0.200	0.282	0.282
		Nr of Stages		14	14	14	14	14	14
Fan	Type			Sirocco fan					
	Quantity			1	1	1	1	1	1
Air Flow Rate	Cooling	High	m³/min	7.00	7.00	8.00	11.00	14.00	16.00
		Low	m³/min	6.00	6.00	6.00	8.50	11.00	12.00
Fan	Motor	Quantity		1	1	1	1	1	1
		Model		D14B20	D14B20	2D14B13	2D14B13	2D14B20	2D14B20
		Output (high)	W	15	15	25	25	35	35
		Drive		Direct drive					
Refrigerant	Name			R-410A					
Cooling	Sound Pressure	High	dBA	35.0	35.0	35.0	38.0	39.0	40.0
		Low	dBA	32.0	32.0	32.0	33.0	34.0	35.0
Piping connections	Liquid (OD)	Type		Flare connection					
		Diameter	mm	6.4	6.4	6.4	6.4	6.4	9.5
	Gas	Type		Flare connection					
		Diameter	mm	12.7	12.7	12.7	12.7	12.7	15.9
	Drain	Diameter	mm	O.D. 21					
	Heat Insulation			Glass Fiber/Urethane Foam					
Air Filter				Resin net with mold resistance					
Refrigerant control				Electronic expansion valve					
Temperature control				Microprocessor thermostat for cooling and heating					
Safety devices				PC board fuse, Fan motor thermal protector					
Standard Accessories				Installation and operation manual, Insulation for fitting, Drain hose, Clamps, Screws, Level adjustment screw, Washer					
Notes				Nominal cooling capacities are based on : indoor temperature : 27°CDB, 19°CWB, outdoor temperature : 35°CDB, equivalent refrigerant piping : 7,5m (horizontal)					
				Nominal heating capacities are based on : indoor temperature : 20°CDB, outdoor temperature : 7°CDB, 6°CWB, equivalent refrigerant piping : 7.5m (horizontal)					
				Capacities are net, includinga deduction for cooling (an addition for heating) for indoor fan motor heat.					
				Sound pressure levels are measured at 220V					

Concealed Floor Standing Type

1-1 TECHNICAL SPECIFICATIONS				FXNQ20MAVE	FXNQ25MAVE	FXNQ32MAVE	FXNQ40MAVE	FXNQ50MAVE	FXNQ63MAVE
Nominal Capacity	Cooling		kW	2.20	2.80	3.60	4.50	5.60	7.10
	Heating		kW	2.50	3.20	4.00	5.00	6.30	8.00
Power input (Nominal)	Cooling		kW	0.049	0.049	0.090	0.090	0.110	0.110
	Heating		kW	0.049	0.049	0.090	0.090	0.110	0.110
Casing	Material			Galvanised steel					
Dimensions	Unit	Height	mm	610	610	610	610	610	610
		Width	mm	930	930	1070	1070	1350	1350
		Depth	mm	220	220	220	220	220	220
Weight	Unit		kg	19	19	23	23	27	27
Heat Exchanger	Dimensions	Nr of Rows		3	3	3	3	3	3
		Fin Pitch	mm	1.50	1.50	1.50	1.50	1.50	1.50
		Face Area	m²	0.159	0.159	0.200	0.200	0.282	0.282
		Nr of Stages		14	14	14	14	14	14
Fan	Type			Sirocco fan					
	Quantity			1	1	1	1	1	1
Air Flow Rate	Cooling	High	m³/min	7.00	7.00	8.00	11.00	14.00	16.00
		Low	m³/min	6.00	6.00	6.00	8.50	11.00	12.00
Fan	Motor	Quantity		1	1	1	1	1	1
		Model		D14B20	D14B20	2D14B13	2D14B13	2D14B20	2D14B20
		Output (high)	W	15	15	25	25	35	35
		Drive		Direct drive					
Refrigerant	Name			R-410A					
Cooling	Sound Pressure	High	dBA	35.0	35.0	35.0	38.0	39.0	40.0
		Low	dBA	32.0	32.0	32.0	33.0	34.0	35.0
Piping connections	Liquid (OD)	Type		Flare connection					
		Diameter	mm	6.4	6.4	6.4	6.4	6.4	9.5
	Gas	Type		Flare connection					
		Diameter	mm	12.7	12.7	12.7	12.7	12.7	15.9
	Drain	Diameter	mm	O.D. 21					
	Heat Insulation			Glass Fiber/Urethane Foam					
Air Filter				Resin net with mold resistance					
Refrigerant control				Electronic expansion valve					
Temperature control				Microprocessor thermostat for cooling and heating					
Safety devices				PC board fuse, Fan motor thermal protector					
Standard Accessories				Installation and operation manual, Insulation for fitting, Drain hose, Clamps, Screws, Washer, Level adjustment screw					
Notes				Nominal cooling capacities are based on : indoor temperature : 27°CDB, 19°CWB, outdoor temperature : 35°CDB, equivalent refrigerant piping : 7,5m (horizontal)					
				Nominal heating capacities are based on : indoor temperature : 20°CDB, outdoor temperature : 7°CDB, 6°CWB, equivalent refrigerant piping : 7.5m (horizontal)					
				Capacities are net, including a deduction for cooling (an addition for heating) for indoor fan motor heat.					
				Sound pressure levels are measured at 220V					

Ceiling Suspended Cassette Type

1-1 TECHNICAL SPECIFICATIONS				FXUQ71MAV1	FXUQ100MAV1	FXUQ125MAV1
Power input (Nominal)	Cooling		kW	0.180	0.289	0.289
	Heating		kW	0.160	0.269	0.269
Casing	Colour			White		
	Material			Resin		
Dimensions	Packing	Height	mm	230	295	295
		Width	mm	960	960	960
		Depth	mm	960	960	960
	Unit	Height	mm	165	230	230
		Width	mm	895	895	895
		Depth	mm	895	895	895
Weight	Unit		kg	25	31	31
	Packed Unit		kg	35	42	42
Heat Exchanger	Dimensions	Length	mm	2101	2101	2101
		Nr of Rows		3	3	3
		Fin Pitch	mm	1.50	1.50	1.50
		Nr of Passes		8	8	12
		Face Area	m²	0.265	0.353	0.353
		Nr of Stages		6	8	8
		Empty Tubeplate Hole		4		
	Fin	Fin type		Cross fin coil (Multi louver fins and N-hix tubes)		
Fan	Type			Turbo fan		
	Quantity			1	1	1
Air Flow Rate	Cooling	High	m³/min	19.00	29.00	32.00
		Low	m³/min	14.00	21.00	23.00
	Heating	High	m³/min	19.00	29.00	32.00
		Low	m³/min	14.00	21.00	23.00
Fan	Motor	Steps		2	2	2
		Output (high)	W	45	90	90
Refrigerant	Name			R-410A		
Sound Level	Cooling	Sound power (nominal)	dBA	56.0	59.0	60.0
Cooling	Sound Pressure	High	dBA	40.0	43.0	44.0
		Low	dBA	35.0	38.0	39.0
Heating	Sound Pressure	High	dBA	40.0	43.0	44.0
		Low	dBA	35.0	38.0	39.0
Piping connections	Liquid (OD)	Type		Flare connection		
		Diameter	mm	9.5	9.5	9.5
	Gas	Type		Flare connection		
		Diameter	mm	15.9	15.9	15.9
	Drain	Diameter	mm	I.D. 20/O.D. 26		
	Heat Insulation			Heat resistant foamed polyethylene, regular foamed polyethylene		
Air Filter				Resin net with mold resistance		
Safety devices				Fan motor thermal protector		
Standard Accessories				Installation and operation manual, Drain hose, Clamp metal, Insulation for fitting, Sealing Pads, Clamps, Washer		
Notes				Nominal cooling capacities are based on : indoor temperature : 27°CDB, 19°CWB, outdoor temperature : 35°CDB, equivalent refrigerant piping : 7,5m (horizontal)		
				Nominal heating capacities are based on : indoor temperature : 20°CDB, outdoor temperature : 7°CDB, 6°CWB, equivalent refrigerant piping : 7.5m (horizontal)		
				Capacities are net, including a deduction for cooling (an addition for heating) for indoor fan motor heat.		
				Sound pressure levels are measured at 220V		

BEV Units

11-1-1Technical Specifications				BEVQ71MAVE	BEVQ100MAVE	BEVQ125MAVE
Power input (Nominal)	Cooling		kW	0.189	0.298	0.298
	Heating		kW	0.169	0.278	0.278
Casing	Material			Galvanised steel plate		
Dimensions	Packing	Height	mm	100	100	100
		Width	mm	350	350	350
		Depth	mm	225	225	225
Sound absorbing thermal insulation material				Flame and heat resistant foamed polyetherene		
Weight	Unit		kg	3.0	3.0	3.5
Indoor Units	Liquid (OD)	Type		Flare connection		
		Diameter	mm	9.5	9.5	9.5
	Gas	Type		Flare connection		
		Diameter	mm	15.9	15.9	15.9
Outdoor Unit	Liquid (OD)	Type		Flare connection		
		Diameter	mm	9.5	9.5	9.5
	Suction gas (OD)	Type		Flare connection		
		Diameter	mm	15.9	15.9	15.9
Standard Accessories	Item			Installation manual, Gas piping connections, Insulation for fitting, Sealing material, Clamps		

Part 3
List of Electrical and Functional Parts

1. List of Electrical and Functional Parts 30
1.1 Outdoor Unit 30
1.2 Indoor Unit 32

1. List of Electrical and Functional Parts

1.1 Outdoor Unit

RXYSQ4 / 5 / 6PA7Y1B

Item	Name		Symbol	Model			Remark (PCB terminal)
				4HP	5HP	6HP	
Compressor	Inverter	Type	M1C	JT1G-VDLYR			Relay
		Output		2.5kW	3.0kW	3.5kW	A2P X102A
	Crankcase heater (INV)		E1HC	33W			A1P X28A
Fan motor	Motor		M1F·M2F	0.07kW			—
	Over-current relay		—	3.2A			—
Functional parts	Electronic expansion valve (Main)	Cooling	Y1E	480pls			A1P X21A
		Heating		PI control			
	Electronic expansion valve (Subcool)	Cooling	Y3E	PI control			A1P X22A
		Heating		PI control			
	4 way valve		Y1S	STF-0404G			A1P X25A
	Solenoid valve (Hot gas)		Y2S	TEV1620DQ2			A1P X26A
	Solenoid valve (Unload circuit)		Y3S	TEV1620DQ2			A1P X27A
Pressure-related parts	Pressure switch (INV)		S1PH	ACB-4UB10 OFF: 4.0+0/-0.15MPa ON: 3.0±0.15MPa			A1P X32A
	Pressure sensor (HP)		S1NPH	PS8051A 0~4.15MPa			A1P X17A
	Pressure sensor (LP)		S1NPL	PS8051A –0.05~1.7MPa			A1P X18A
Thermistor	Main PCB	For outdoor air	R1T	3.5~360kΩ			A1P X11A
		For discharge pipe	R2T	5.0~640kΩ			A1P X12A 1-2Pin
		For suction pipe 1	R3T	3.5~360kΩ			A1P X12A 3-4Pin
		For subcooling heat exchanger	R4T	3.5~360kΩ			A1P X12A 5-6Pin
		For suction pipe 2	R5T	3.5~360kΩ			A1P X12A 7-8Pin
		For heat exchanger	R6T	3.5~360kΩ			A1P X13A 1-2Pin
		For liquid pipe 1	R7T	3.5~360kΩ			A1P X13A 3-4Pin
		For liquid pipe 2	R8T	3.5~360kΩ			A1P X13A 5-6Pin
Others	Fuse (A1P)		F1U	AC250V 6.3A Time lag fuse			—

RXYSQ4 / 5 / 6PA7V1B

Item	Name		Symbol	Model			Remark (PCB terminal)
				4HP	5HP	6HP	
Compressor	Inverter	Type	M1C	JT100G-VDL			Relay
		Output		2.5kW	3.0kW	3.5kW	A1P
	Crankcase heater (INV)		E1HC	33W			A1P X28A
Fan motor	Motor		M1F·M2F	0.07kW			—
	Over-current relay		—	3.2A			—
Functional parts	Electronic expansion valve (Main)	Cooling	Y1E	480pls			A1P X21A
		Heating		PI control			
	Electronic expansion valve (Subcool)	Cooling	Y3E	PI control			A1P X22A
		Heating		PI control			
	4 way valve		Y1S	STF-0404G			A1P X25A
	Solenoid valve (Hot gas)		Y2S	TEV1620DQ2			A1P X26A
	Solenoid valve (Unload circuit)		Y3S	TEV1620DQ2			A1P X27A
Pressure-related parts	Pressure switch (INV)		S1PH	ACB-4UB10 OFF: 4.0+0/-0.15MPa ON: 3.0±0.15MPa			A1P X32A
	Pressure sensor (HP)		S1NPH	PS8051A 0~4.15MPa			A1P X17A
	Pressure sensor (LP)		S1NPL	PS8051A –0.05~1.7MPa			A1P X18A
Thermistor	Main PCB	For outdoor air	R1T	3.5~360kΩ			A1P X11A
		For discharge pipe	R2T	5.0~640kΩ			A1P X12A 1-2Pin
		For suction pipe 1	R3T	3.5~360kΩ			A1P X12A 3-4Pin
		For heat exchanger	R4T	3.5~360kΩ			A1P X12A 5-6Pin
		For suction pipe 2	R5T	3.5~360kΩ			A1P X12A 7-8Pin
		For subcooling heat exchanger	R6T	3.5~360kΩ			A1P X13A 1-2Pin
		For liquid pipe 1	R7T	3.5~360kΩ			A1P X13A 3-4Pin
		For liquid pipe 2	R8T	3.5~360kΩ			A1P X13A 5-6Pin
Others	Fuse (A1P)		F1U	AC250V 6.3A Time lag fuse			—

1.2 Indoor Unit

Parts Name		Symbol	Model									Remark
			FXFQ20 PVE	FXFQ25 PVE	FXFQ32 PVE	FXFQ40 PVE	FXFQ50 PVE	FXFQ63 PVE	FXFQ80 PVE	FXFQ 100 PVE	FXFQ 125 PVE	
Remote Control	Wired Remote Control		BRC1D52									Option
	Infrared remote control		BRC7F532									
Motors	Fan Motor	M1F	Thermal Proctector : OFF : $108^{\pm5}$ (ON : $96^{\pm15}$)									
	Drain Pump	M1P	AC220-240V (50Hz) AC220V (60Hz) PLD-12230DM Thermal Fuse 145°C									
	Swing Motor	M1S	MP35HCA[3P007482-1] Stepping Motor DC16V									
Thermistors	Thermistor (Suction Air)	R1T	In PC board A4P or wired Remote Control									
	Thermistor (for Heat Exchanger High Temp.)	R3T	ST8605-5 ϕ8 L1000 20kΩ (25°C)									
	Thermistor (Heat Exchanger)	R2T	ST8602A-5 ϕ6 L1000 20kΩ (25°C)									
Others	Float Switch	S1L	FS-0211B									
	Fuse	F1U	250V 5A ϕ5.2									
	Thermal Fuse	TFu	—									
	Transformer	T1R	—									

Parts Name		Symbol	Model								Remark
			FXCQ 20MV3	FXCQ 25MV3	FXCQ 32MV3	FXCQ 40MV3	FXCQ 50MV3	FXCQ 63MV3	FXCQ 80MV3	FXCQ 125 MV3	
Remote Control	Wired Remote Control		BRC1D52								Option
	Infrared remote control		BRC7C62								
Motors	Fan Motor	M1F	AC 220~240V 50Hz								
			1ϕ10W	1ϕ15W		1ϕ20W		1ϕ30W	1ϕ50W	1ϕ85W	
			Thermal Fuse 152°C				—	Thermal protector 135°C : OFF 87°C : ON			
	Drain Pump	M1P	AC220-240V (50Hz) AC220V (60Hz) PLD-12230DM Thermal Fuse 145°C								
	Swing Motor	M1S	MT8-L[3PA07509-1] AC200~240V								
Thermistors	Thermistor (Suction Air)	R1T	ST8601-6 ϕ4 L1250 20kΩ (25°C)								
	Thermistor (for Heat Exchanger High Temp.)	R3T	ST8605-6 ϕ8 L1250 20kΩ (25°C)								
	Thermistor (Heat Exchanger)	R2T	ST8602A-5 ϕ6 L1000 20kΩ (25°C)								
Others	Float Switch	S1L	FS-0211B								
	Fuse	F1U	250V 5A ϕ5.2								
	Transformer	T1R	TR22H21R8								

Parts Name		Symbol	Model					Remark
			FXZQ 20MV1	FXZQ 25MV1	FXZQ 32MV1	FXZQ 40MV1	FXZQ 50MV1	
Remote Control	Wired Remote Control		BRC1D52					Option
	Infrared remote control		BRC7E530					
Motors	Fan Motor	M1F	AC 220~240V 50Hz					
			1ϕ55W 4P					
			Thermal Fuse OFF : $130^{\pm5}$ / ON : $80^{\pm20}$					
	Capacitor, fan motor	C1	4.0μ F 400VAC					
	Drain Pump	M1P	AC220-240V (50Hz) PLD-12230DM Thermal Fuse 145°C					
	Swing Motor	M1S	MP35HCA [3P080801-1] AC200~240V					
Thermistors	Thermistor (Suction Air)	R1T	ST8601A-1 ϕ4 L250 20kΩ (25°C)					
	Thermistor (for Heat Exchanger High Temp.)	R3T	ST8605-3 ϕ8 L630 20kΩ (25°C)					
	Thermistor (Heat Exchanger)	R2T	ST8602A-3 ϕ6 L630 20kΩ (25°C)					
Others	Float Switch	S1L	FS-0211					
	Fuse	F1U	250V 5A ϕ5.2					
	Transformer	T1R	TR22H21R8					

Parts Name		Symbol	Model				Remark
			FXKQ 25MAVE	FXKQ 32MAVE	FXKQ 40MAVE	FXKQ 63MAVE	
Remote Control	Wired Remote Control		BRC1D52				Option
	Infrared remote control		BRC4C61				
Motors	Fan Motor	M1F	AC 220~240V 50Hz				
			1ϕ15W 4P		1ϕ20W 4P	1ϕ45W 4P	
			Thermal Fuse 146°C		Thermal protector 120°C : OFF 105°C : ON		
	Drain Pump	M1P	AC 220-240V (50Hz) PLD-12200DM Thermal Fuse 145°C				
	Swing Motor	M1S	MP35HCA [3P080801-1] AC200~240V				
Thermistors	Thermistor (Suction Air)	R1T	ST8601-13 ϕ4 L630 20kΩ (25°C)				
	Thermistor (for Heat Exchanger High Temp.)	R3T	ST8605-7 ϕ8 L1600 20kΩ (25°C)				
	Thermistor (Heat Exchanger)	R2T	ST8602A-7 ϕ6 L1600 20kΩ (25°C)				
Others	Float Switch	S1L	FS-0211B				
	Fuse	F1U	250V 5A ϕ5.2				
	Transformer	T1R	TR22H21R8				

Parts Name		Symbol	Model						Remark
			FXDQ 20 PVE	FXDQ 25PVE	FXDQ 32PVE	FXDQ 40NAVE	FXDQ 50NAVE	FXDQ 63NAVE	
Remote Control	Wired Remote Control		BRC1D52						Option
	Infrared remote control		BRC4C62						
Motors	Fan Motor	M1F	AC 220~240V 50Hz						
			1ϕ62W				1ϕ130W		
			Thermal protector 130°C: OFF, 83°C: ON						
	Drain Pump	M1P	AC220-240V (50Hz) PLD-12230DM Thermal Fuse 145°C						*
Thermistors	Thermistor (Suction Air)	R1T	ST8601-1 ϕ4 L=250 20kΩ (25°C)						
	Thermistor (for Heat Exchanger High Temp.)	R3T	ST8605-4 ϕ8 L=800 20kΩ (25°C)						
	Thermistor (Heat Exchanger)	R2T	ST8602A-4 ϕ6 L=800 20kΩ (25°C)						
Others	Float Switch	S1L	FS-0211E						*
	Fuse	F1U	250V 5A ϕ5.2						
	Transformer	T1R	TR22H21R8						

Parts Name		Symbol	Model		Remark
			FXDQ 20M8V3B	FXDQ 25M8V3B	
Remote Control	Wired Remote Control		BRC1D52		Option
	Infrared remote control		BRC4C62		
Motors	Fan Motor	M1F	AC 200~240V 50/60Hz		
			1ϕ10W4P		
			Thermal protector 135°C: OFF, 87°C: ON		
Thermistors	Thermistor (Suction Air)	R1T	ST8601-4 ϕ4 L=800 20kΩ (25°C)		
	Thermistor (for Heat Exchanger High Temp.)	R3T	ST8605-7 ϕ8 L=1600 20kΩ (25°C)		
	Thermistor (Heat Exchanger)	R2T	ST8602A-6 ϕ6 L=1250 20kΩ (25°C)		
Others	Fuse	F1U	250V 10A		
	Transformer	T1R	TR22H21R8		

Parts Name		Symbol	Model									Remark
			FXSQ 20 MV3	FXSQ 25 MV3	FXSQ 32 MV3	FXSQ 40 MV3	FXSQ 50 MV3	FXSQ 63 MV3	FXSQ 80 MV3	FXSQ 100 MV3	FXSQ 125 MV3	
Remote Control	Wired Remote Control		BRC1D52									Option
	Infrared remote control		BRC4C62									
Motors	Fan Motor	M1F	AC 220~240V 50Hz									
			1ϕ50W			1ϕ65W	1ϕ85W	1ϕ125 W	1ϕ225W			
			Thermal Fuse 152°C						Thermal protector 135°C : OFF 87°C : ON			
	Drain Pump	M1P	AC220-240V (50Hz) PLD-12230DM Thermal Fuse 145°C									
Thermistors	Thermistor (Suction Air)	R1T	ST8601-4 ϕ4 L800 20kΩ (25°C)									
	Thermistor (for Heat Exchanger High Temp.)	R3T	ST8605-7 ϕ8 L1600 20kΩ (25°C)									
	Thermistor (Heat Exchanger)	R2T	ST8602A-6 ϕ6 L1250 20kΩ (25°C)									
Others	Float Switch	S1L	FS-0211B									
	Fuse	F1U	250V 5A ϕ5.2									
	Transformer	T1R	TR22H21R8									

Parts Name		Symbol	Model						Remark
			FXMQ 40PVE	FXMQ 50PVE	FXMQ 63PVE	FXMQ 80PVE	FXMQ 100PVE	FXMQ 125PVE	
Remote Control	Wired Remote Control		BRC1C62						
	Infrared remote control		BRC4C65						
Motors	Fan Motor	M1F	DC280V 140W 8P				DC373V 350W 8P		
	Drain Pump	M1P	AC220-240V (50/60Hz) PLD-12230DM Thermal protector 145°C						
Thermistors	Thermistor (Suction Air)	R1T	ST8601-3 ϕ L630 20kΩ (25°C)						
	Thermistor (for Heat Exchanger High Temp.)	R3T	ST8605-14 ϕ8 L1000 20kΩ (25°C)						
	Thermistor (for Heat Exchanger)	R2T	ST8602A-6 ϕ8 L1250 20kΩ (25°C)						
Others	Float Switch	S1L	FS-0211B						
	Fuse (A1P)	F1U	250V 3.15A						
	Fuse (A2P, A3P)	F3U· F4U	250V 6.3A						
	Fuse (A2P)	F2U	250V 5A	—					

Parts Name		Symbol	Model			Remark
			FXHQ 32MAVE	FXHQ 63MAVE	FXHQ 100MAVE	
Remote Control	Wired Remote Control		BRC1D52			Option
	Wireless Control		BRC7E63W			
Motors	Fan Motor	M1F	AC 220~240V/220V 50Hz/60Hz			
			1ϕ63W		1ϕ130W	
			Thermal protector 130°C : OFF 80°C : ON			
	Capacitor for Fan Motor	C1R	3.0μF-400V		9.0μF-400V	
	Swing Motor	M1S	MT8-L[3P058751-1] AC200~240V			
Thermistors	Thermistor (Suction Air)	R1T	ST8601A-1 ϕ4 L250 20kΩ (25°C)			
	Thermistor (for Heat Exchanger High Temp.)	R3T	ST8605-6 ϕ8 L = 1250 20kΩ (25°C)		ST8605-6 ϕ8 L = 1250 20kΩ (25°C)	
	Thermistor (Heat Exchanger)	R2T	ST8602A-6 ϕ6 L = 1250 20kΩ (25°C)		ST8602A-6 ϕ6 L = 1250 20kΩ (25°C)	
Others	Fuse	F1U	250V 5A ϕ5.2			
	Transformer	T1R	TR22H21R8			

Parts Name		Symbol	Model						Remark
			FXAQ 20MAVE	FXAQ 25MAVE	FXAQ 32MAVE	FXAQ 40MAVE	FXAQ 50MAVE	FXAQ 63MAVE	
Remote Control	Wired Remote Control		BRC1D52						Option
	Infrared remote control		BRC7E618						
Motors	Fan Motor	M1F	AC 220~240V 50Hz						
			1ϕ40W			1ϕ43W			
			Thermal protector 130°C : OFF 80°C : ON						
	Swing Motor	M1S	MP24 [3SB40333-1] AC200~240V			MSFBC20C21 [3SB40550-1] AC200~240V			
Thermistors	Thermistor (Suction Air)	R1T	ST8601-2 ϕ4 L400 20kΩ (25°C)						
	Thermistor (for Heat Exchanger High Temp.)	R3T	ST8605-2 ϕ8 L400 20kΩ (25°C)						
	Thermistor (for Heat Exchanger)	R2T	ST8602-2 ϕ6 L400 20kΩ (25°C)						
Others	Float Switch	S1L	OPTION						
	Fuse	F1U	250V 5A ϕ5.2						

Parts Name		Symbol	Model						Remark
			FXLQ 20MAVE	FXLQ 25MAVE	FXLQ 32MAVE	FXLQ 40MAVE	FXLQ 50MAVE	FXLQ 63MAVE	
Remote Control	Wired Remote Control		BRC1D52						Option
	Infrared remote control		BRC4C62						
Motors	Fan Motor	M1F	AC 220~240V 50Hz						
			1ϕ15W		1ϕ25W		1ϕ35W		
			Thermal protector 135°C : OFF 120°C : ON						
	Capacitor for Fan Motor	C1R	1.0μF-400V		0.5μF-400V	1.0μF-400V	1.5μF-400V	2.0μF-400V	
Thermistors	Thermistor (Suction Air)	R1T	ST8601-6 ϕ4 L1250 20kΩ (25°C)						
	Thermistor (for Heat Exchanger High Temp.)	R3T	ST8605-9 ϕ8 L2500 20kΩ (25°C)						
	Thermistor (for Heat Exchanger)	R2T	ST8602A-9 ϕ6 L2500 20kΩ (25°C)						
Others	Fuse	F1U	AC250V 5A						
	Transformer	T1R	TR22H21R8						

Parts Name		Symbol	Model						Remark
			FXNQ 20MAVE	FXNQ 25MAVE	FXNQ 32MAVE	FXNQ 40MAVE	FXNQ 50MAVE	FXNQ 63MAVE	
Remote Control	Wired Remote Control		BRC1D52						Option
	Infrared remote control		BRC4C62						
Motors	Fan Motor	M1F	AC 220~240V 50Hz						
			1ϕ15W		1ϕ25W		1ϕ35W		
			Thermal protector 135°C : OFF 120°C : ON						
	Capacitor for Fan Motor	C1R	1.0μF-400V		0.5μF-400V	1.0μF-400V	1.5μF-400V	2.0μF-400V	
Thermistors	Thermistor (Suction Air)	R1T	ST8601-6 ϕ4 L1250 20kΩ (25°C)						
	Thermistor (for Heat Exchanger High Temp.)	R3T	ST8605-9 ϕ8 L2500 20kΩ (25°C)						
	Thermistor (for Heat Exchanger)	R2T	ST8602A-9 ϕ6 L2500 20kΩ (25°C)						
Others	Fuse	F1U	AC250V 5A						
	Transformer	T1R	TR22H21R8						

Parts Name		Symbol	Model			Remark
			FXUQ71MAV1	FXUQ100MAV1	FXUQ125MAV1	
Remote Control	Wired Remote Control		BRC1C62			Option
	Infrared remote control		BRC7C528W			
Motors	Fan Motor	M1F	AC 220~240V 50Hz			
			1ϕ45W	1ϕ90W		
			Thermal protector 130°C	Thermal protector 130°C : OFF 83°C : ON		
	Drain Pump	M1P	AC220-240V (50Hz) AC220V (60Hz) PJV-1426			
	Swing Motor	M1S	MT8-L[3PA07572-1] AC200~240V			
Thermistors	Thermistor (Suction Air)	R1T	ST8601-1 ϕ4 L=250 20kΩ (25°C)			
	Thermistor (Heat Exchanger)	R2T	ST8602A-4 ϕ6 L=800 20kΩ (25°C)			
Others	Float Switch	S1L	FS-0211B			

Part 4
Refrigerant Circuit

1. Refrigerant Circuit 40
   1.1 Outdoor Unit 40
2. Functional Parts Layout 44
   2.1 RXYSQ4 / 5 / 6PA7Y1B 44
   2.2 RXYSQ4 / 5 / 6PA7V1B 45

1. Refrigerant Circuit

1.1 Outdoor Unit

RXYSQ4 / 5 / 6PA7Y1B

No. in refrigerant system diagram	Symbol	Name	Major Function
A	M1C	Inverter compressor (INV)	Inverter compressor is operated on frequencies between 36 Hz and 195 Hz by using the inverter. 31 steps
D	M1F M2F	Inverter fan	Since the system is of air heat exchanging type, the fan is operated at 8-step rotation speed by using the inverter.
E	Y1E	Electronic expansion valve (Main: EV1)	While in heating operation, PI control is applied to keep the outlet superheated degree of air heat exchanger constant.
F	Y3E	Electronic expansion valve (Subcool: EV3)	PI control is applied to keep the outlet superheated degree of subcooling heat exchanger constant.
G	Y2S	Solenoid valve (Hot gas: SVP)	Used to prevent the low pressure from transient falling.
H	Y3S	Solenoid valve (Unload circuit SVUL)	Used to the unloading operation of compressor.
M	Y1S	Four way valve	Used to switch the operation mode between cooling and heating.
N	S1NPH	High pressure sensor	Used to detect high pressure.
O	S1NPL	Low pressure sensor	Used to detect low pressure.
P	S1PH	HP pressure switch (For INV compressor)	In order to prevent the increase of high pressure when a malfunction occurs, this switch is activated at high pressure of 4.0 MPa or more to stop the compressor operation.
T	—	Pressure regulating valve 1 (Receiver to discharge pipe)	This valve opens at a pressure of 4.0 MPa for prevention of pressure increase, thus resulting in no damage of functional parts due to the increase of pressure in transportation or storage.
1	R1T	Thermistor (Outdoor air: Ta)	Used to detect outdoor temperature, correct discharge pipe temperature, and others.
2	R2T	Thermistor (INV discharge pipe: Tdi)	used to detect discharge pipe temperature, make the temperature protection control of compressor, and others.
3	R3T	Thermistor (Suction pipe1: Ts1)	used to detect suction pipe temperature, keep the suction superheated degree constant in heating operation, and others.
4	R4T	Thermistor (Subcooling heat exchanger gas pipe: Tsh)	Used to control of subcooling electronic expansion valve.
5	R5T	Thermistor (Suction pipe2: Ts2)	Used to the calculation of an internal temperature of compressor etc.
6	R6T	Thermistor (Heat exchanger deicer: Tb)	Used to detect liquid pipe temperature of air heat exchanger, determine defrosting operation, and others.
7	R7T	Thermistor (Liquid pipe1: Tl1)	Used to detect refrigerant over charge in check operation, and others.
8	R8T	Thermistor (Liquid pipe2: Tl2)	Used to detect refrigerant over charge in check operation, and others.

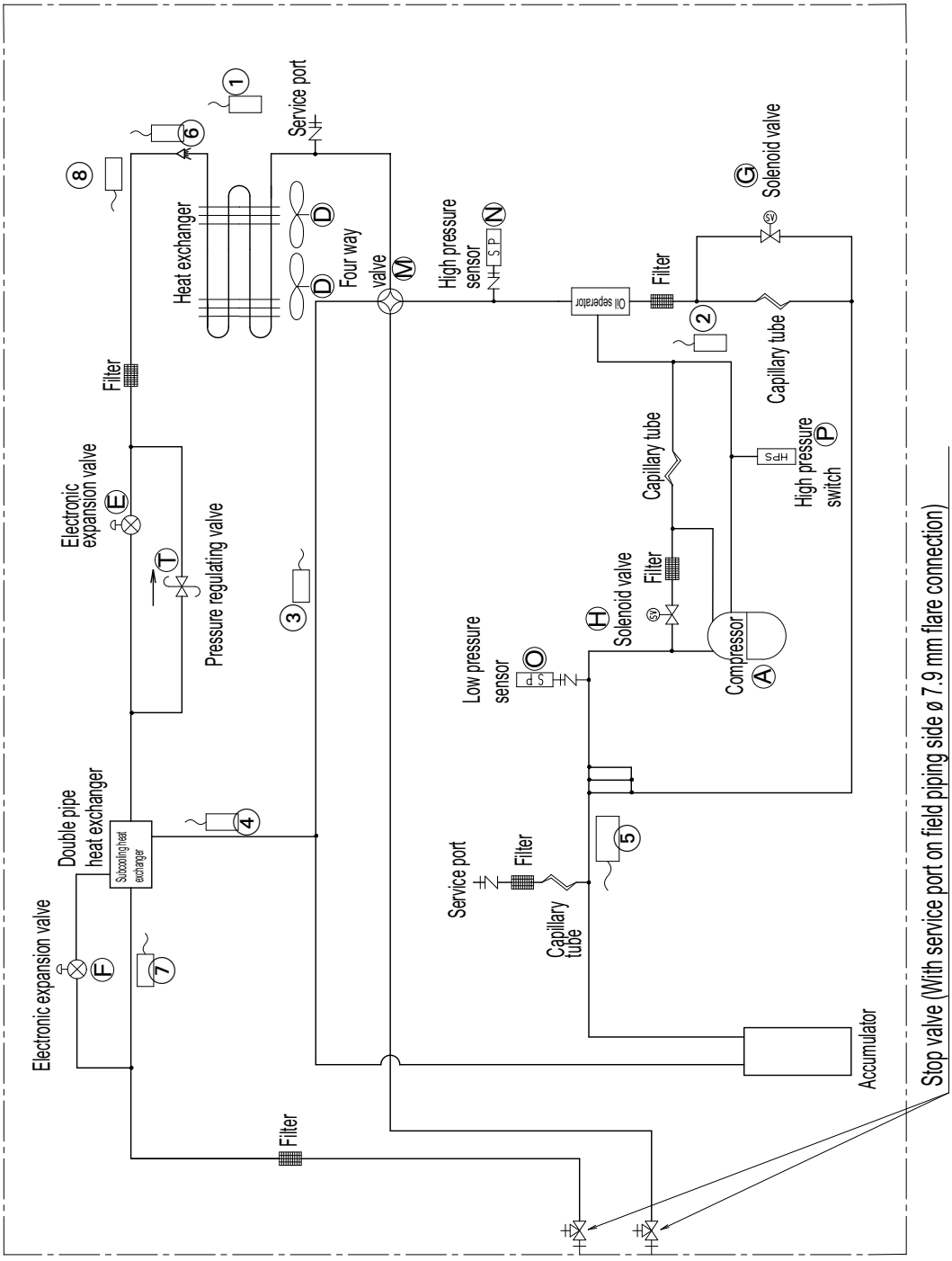
Service port
Heat exchanger
Four way valve
High pressure sensor
Oil seperator
Filter
Solenoid valve
Capillary tube
High pressure switch
Compressor
Low pressure sensor
Solenoid valve
Filter
Capillary tube
Filter
Service port
Capillary tube
Accumulator
Filter
Pressure regulating valve
Electronic expansion valve
Double pipe heat exchanger
Subcooling heat exchanger
Electronic expansion valve
Stop valve (With service port on field piping side ø 7.9 mm flare connection)

C : 3D052628

RXYSQ4 / 5 / 6PA7V1B

No. in refrigerant system diagram	Symbol	Name	Major Function
A	M1C	Inverter compressor (INV)	Inverter compressor is operated on frequencies between 36 Hz and 195 Hz by using the inverter. 31 steps
D	M1F M2F	Inverter fan	Since the system is of air heat exchanging type, the fan is operated at 8-step rotation speed by using the inverter.
E	Y1E	Electronic expansion valve (Main: EV1)	While in heating operation, PI control is applied to keep the outlet superheated degree of air heat exchanger constant.
F	Y3E	Electronic expansion valve (Subcool: EV3)	PI control is applied to keep the outlet superheated degree of subcooling heat exchanger constant.
G	Y2S	Solenoid valve (Hot gas: SVP)	Used to prevent the low pressure from transient falling.
H	Y3S	Solenoid valve (Unload circuit SVUL)	Used to the unloading operation of compressor.
M	Y1S	Four way valve	Used to switch the operation mode between cooling and heating.
N	S1NPH	High pressure sensor	Used to detect high pressure.
O	S1NPL	Low pressure sensor	Used to detect low pressure.
P	S1PH	HP pressure switch (For INV compressor)	In order to prevent the increase of high pressure when a malfunction occurs, this switch is activated at high pressure of 4.0 MPa or more to stop the compressor operation.
T	—	Pressure regulating valve 1 (Receiver to discharge pipe)	This valve opens at a pressure of 4.0 MPa for prevention of pressure increase, thus resulting in no damage of functional parts due to the increase of pressure in transportation or storage.
1	R1T	Thermistor (Outdoor air: Ta)	Used to detect outdoor temperature, correct discharge pipe temperature, and others.
2	R2T	Thermistor (INV discharge pipe: Tdi)	used to detect discharge pipe temperature, make the temperature protection control of compressor, and others.
3	R3T	Thermistor (Suction pipe1: Ts1)	used to detect suction pipe temperature, keep the suction superheated degree constant in heating operation, and others.
4	R4T	Thermistor (Heat exchanger deicer: Tb)	Used to detect liquid pipe temperature of air heat exchanger, determine defrosting operation, and others.
5	R5T	Thermistor (Suction pipe2: Ts2)	Used to the calculation of an internal temperature of compressor etc.
6	R6T	Thermistor (Subcooling heat exchanger gas pipe: Tsh)	Used to control of subcooling electronic expansion valve.
7	R7T	Thermistor (Liquid pipe1: Tl1)	Used to detect refrigerant over charge in check operation, and others.
8	R8T	Thermistor (Liquid pipe2: Tl2)	Used to detect refrigerant over charge in check operation, and others.

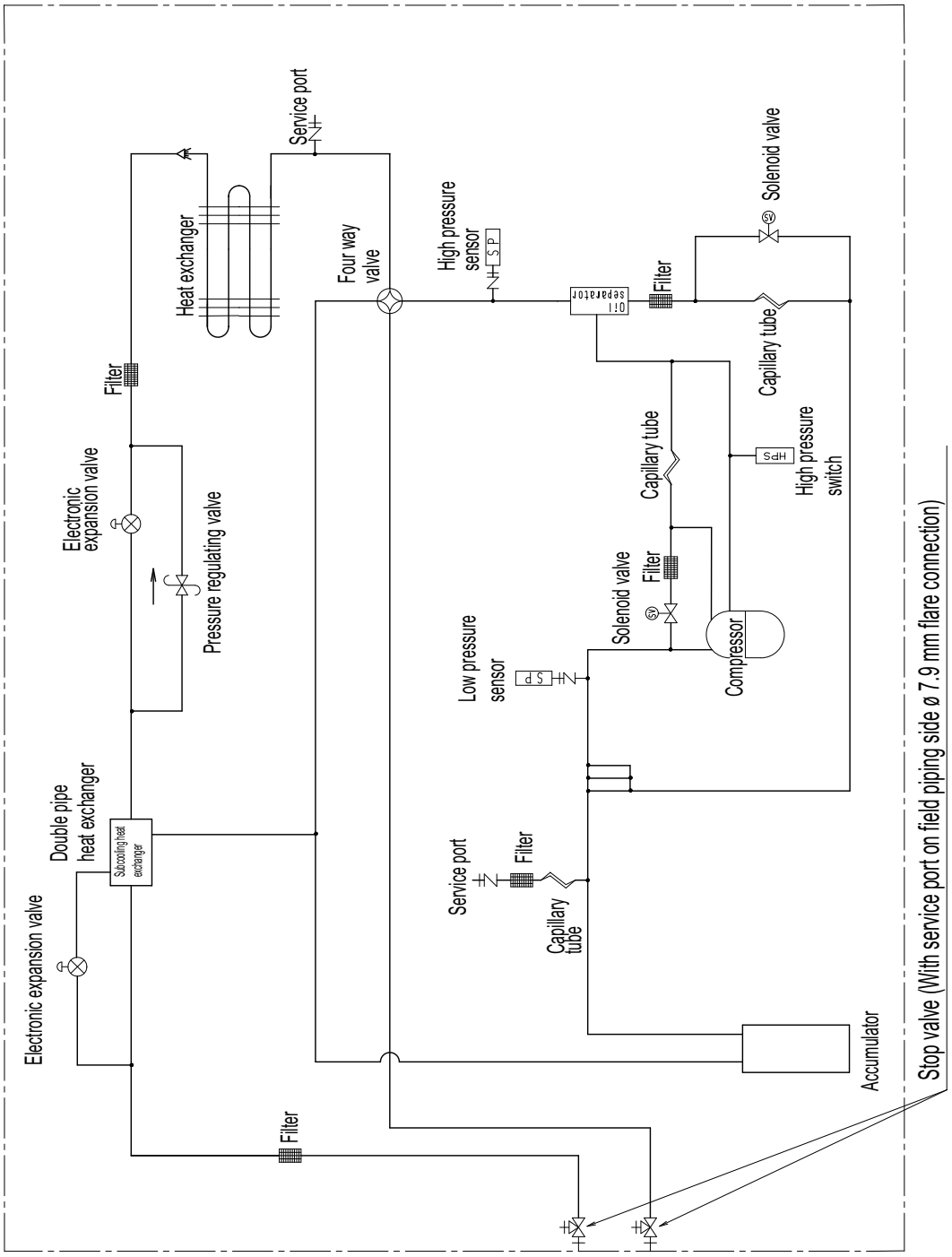
Service port
Heat exchanger
Four way valve
High pressure sensor
S P
Oil separator
Filter
Solenoid valve
Capillary tube
Filter
Electronic expansion valve
Pressure regulating valve
Capillary tube
HPS
High pressure switch
Solenoid valve
Filter
Low pressure sensor
S P
Compressor
Double pipe heat exchanger
Subcooling heat exchanger
Service port
Filter
Capillary tube
Electronic expansion valve
Accumulator
Filter
Stop valve (With service port on field piping side ø 7.9 mm flare connection)

C : 3D052712

2. Functional Parts Layout

2.1 RXYSQ4 / 5 / 6PA7Y1B

Birds-eye view

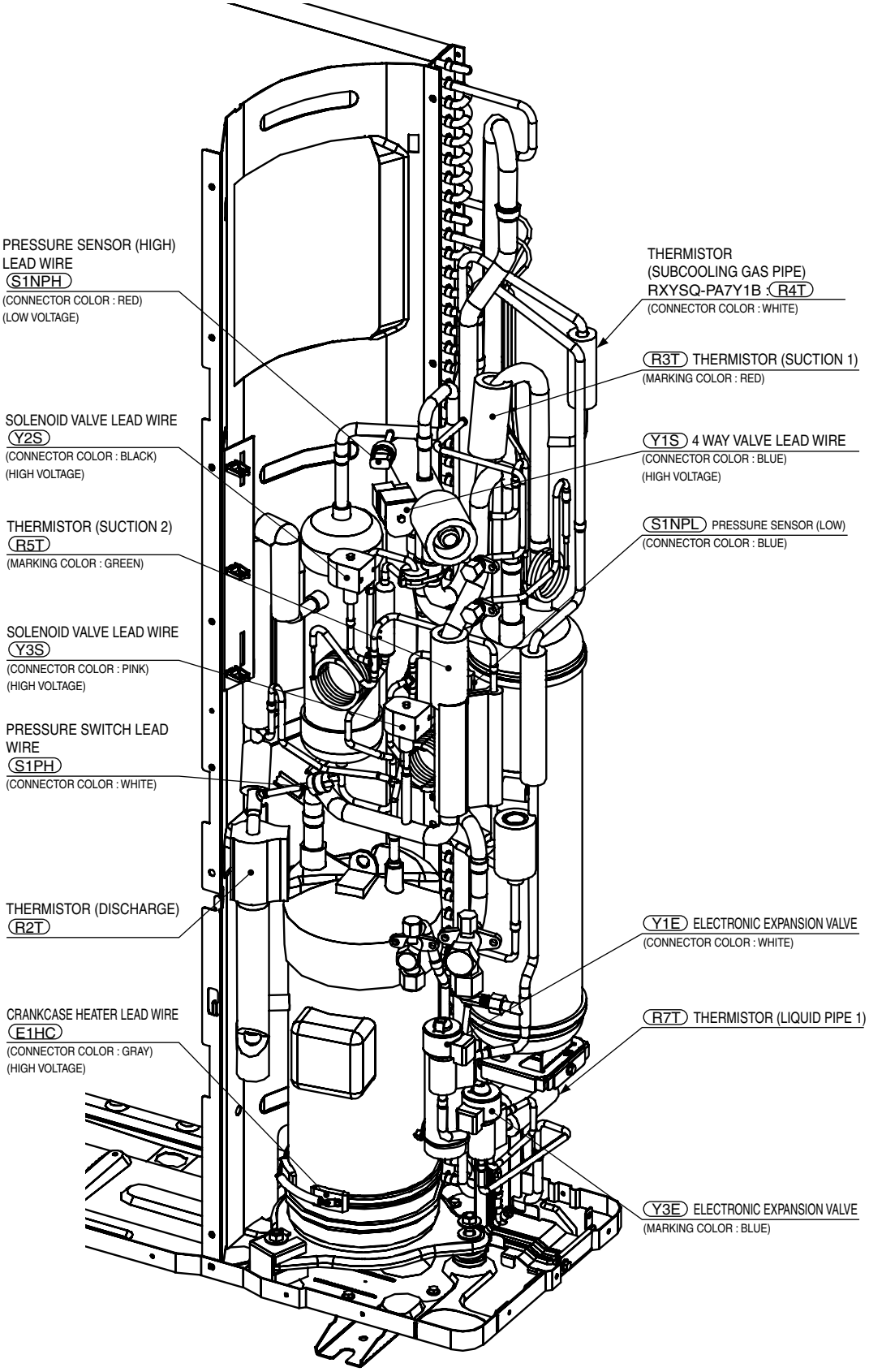

2.2 RXYSQ4 / 5 / 6PA7V1B

Birds-eye view

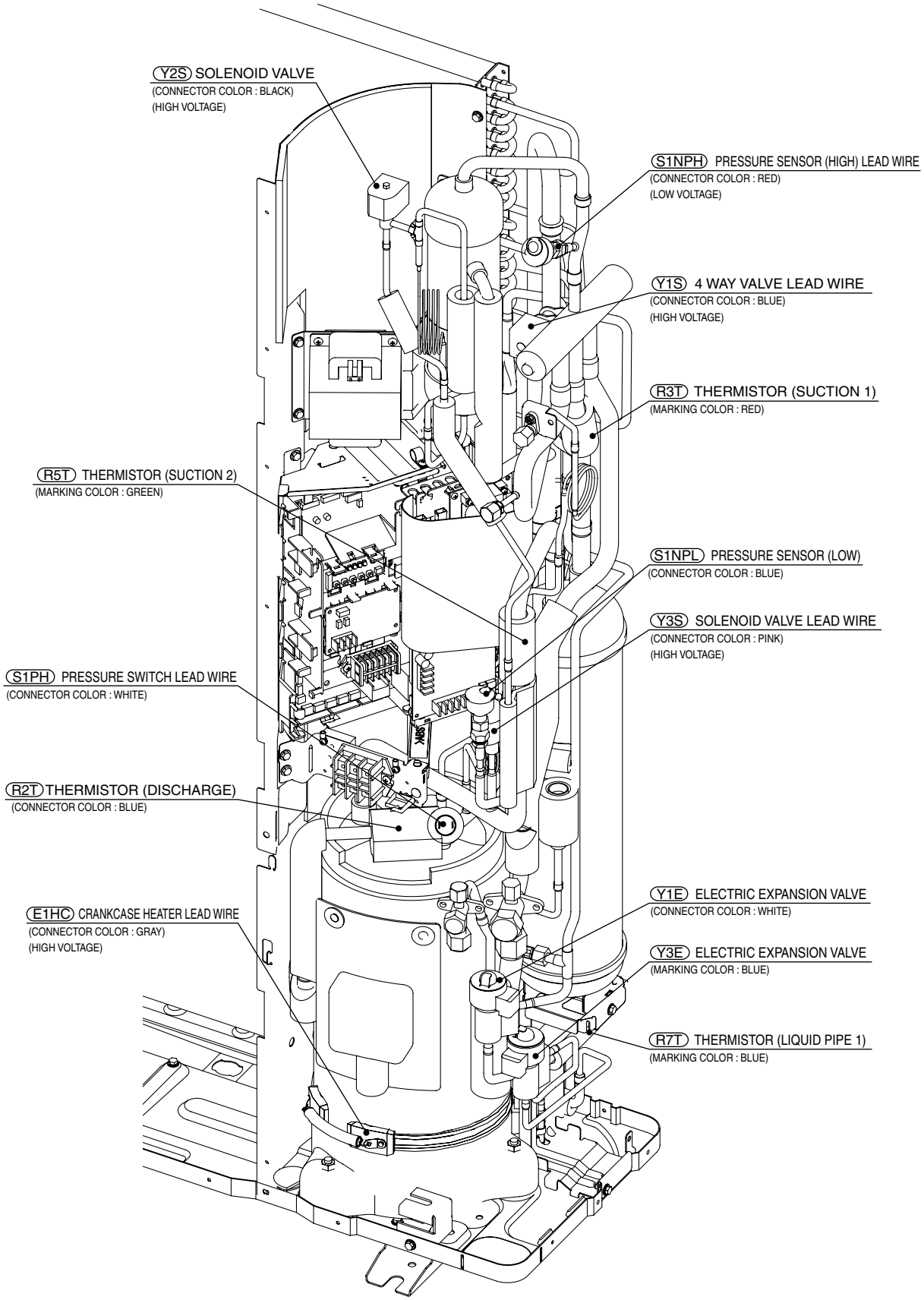

Back view

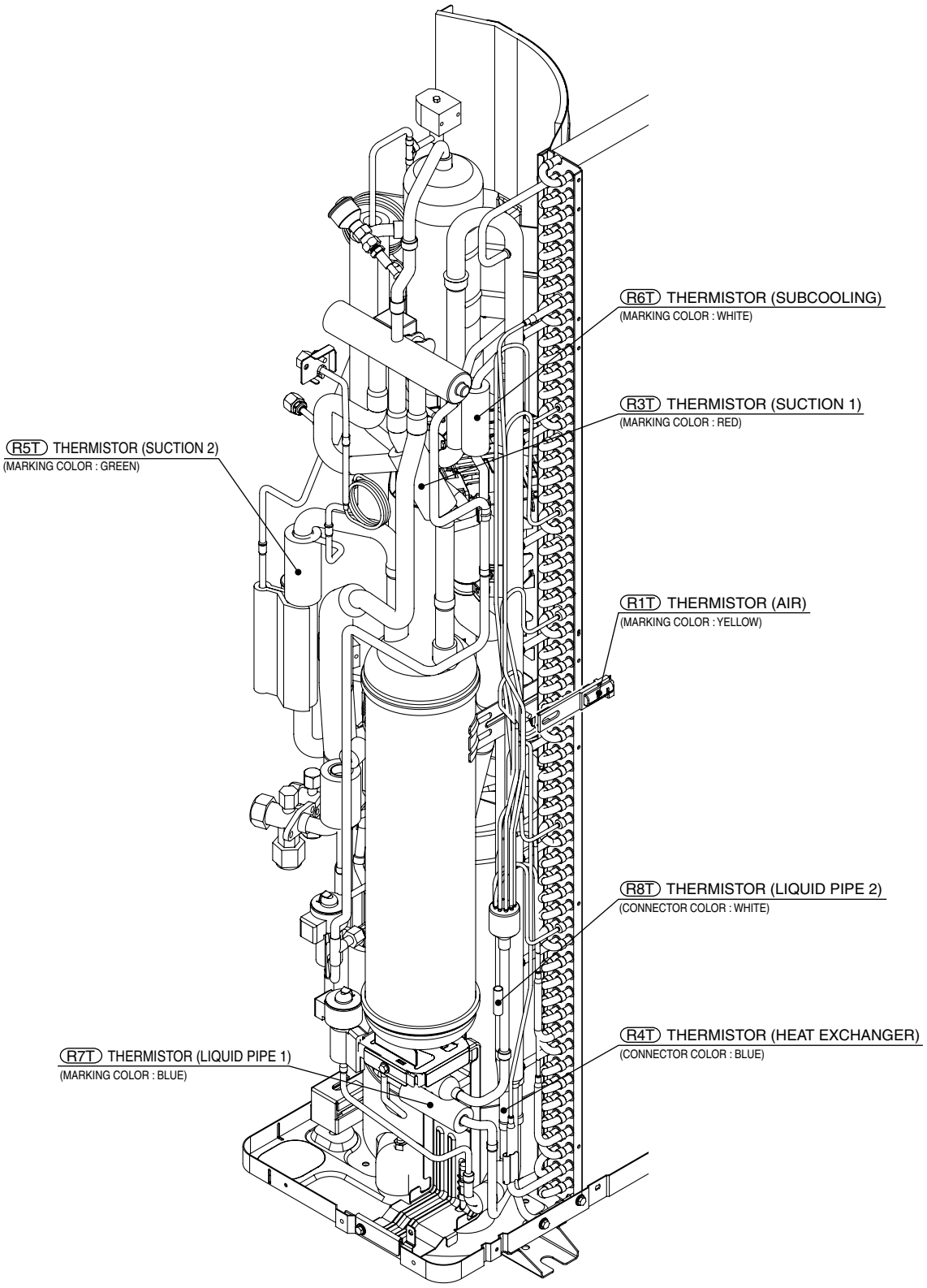
R6T THERMISTOR (SUBCOOLING)
(MARKING COLOR : WHITE)
R3T THERMISTOR (SUCTION 1)
(MARKING COLOR : RED)
R5T THERMISTOR (SUCTION 2)
(MARKING COLOR : GREEN)
R1T THERMISTOR (AIR)
(MARKING COLOR : YELLOW)
R8T THERMISTOR (LIQUID PIPE 2)
(CONNECTOR COLOR : WHITE)
R4T THERMISTOR (HEAT EXCHANGER)
(CONNECTOR COLOR : BLUE)
R7T THERMISTOR (LIQUID PIPE 1)
(MARKING COLOR : BLUE)

Part 5
Function

1. Operation Mode 48
2. Basic Control 49
   2.1 Normal Operation 49
   2.2 Compressor PI Control 50
   2.3 Electronic Expansion Valve PI Control 51
   2.4 Cooling Operation Fan Control 52
3. Special Control 53
   3.1 Startup Control 53
   3.2 Oil Return Operation 54
   3.3 Defrosting Operation 56
   3.4 Pump-down Residual Operation 57
   3.5 Restart Standby 58
   3.6 Stopping Operation 59
4. Protection Control 60
   4.1 High Pressure Protection Control 60
   4.2 Low Pressure Protection Control 61
   4.3 Discharge Pipe Protection Control 62
   4.4 Inverter Protection Control 63
5. Other Control 64
   5.1 Demand Operation 64
   5.2 Heating Operation Prohibition 64
6. Outline of Control (Indoor Unit) 65
   6.1 Drain Pump Control 65
   6.2 Louver Control for Preventing Ceiling Dirt 67
   6.3 Thermostat Sensor in Remote Control 68
   6.4 Freeze Prevention 70
   6.5 View of Operations of Swing Flaps 71
   6.6 Electronic Expansion Valve Control 72
   6.7 Hot Start Control (In Heating Operation Only) 72

1. Operation Mode

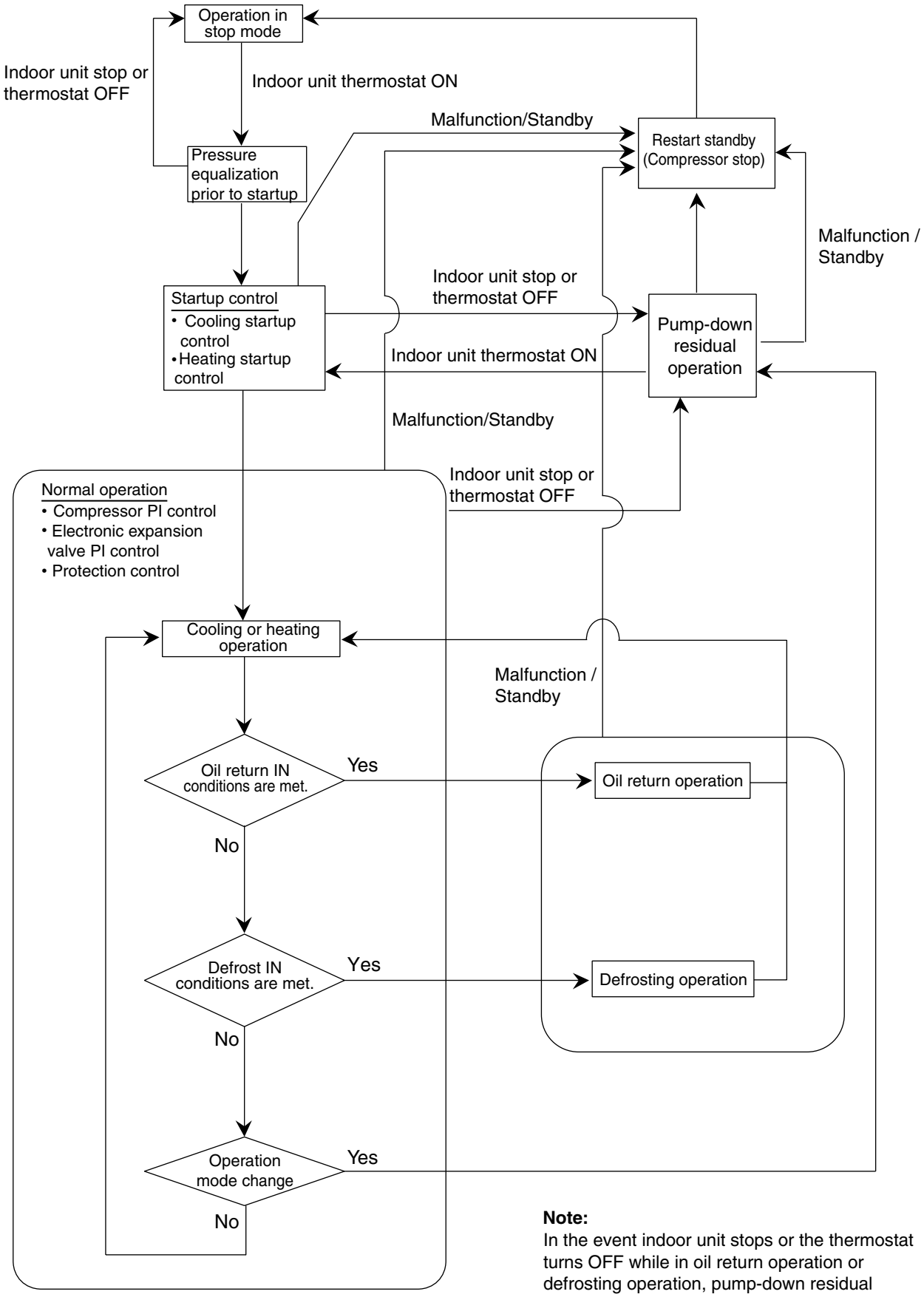

Note:
In the event indoor unit stops or the thermostat turns OFF while in oil return operation or defrosting operation, pump-down residual operation is performed on completion of the oil return operation or defrosting operation.

(V3152)

2. Basic Control

2.1 Normal Operation

■ **Cooling Operation**

Actuator	Operation	Remarks
Compressor	Compressor PI control	Used for high pressure protection control, low pressure protection control, discharge pipe temperature protection control, and compressor operating frequency upper limit control with inverter protection control.
Outdoor unit fan	Cooling fan control	—
Four way valve	OFF	—
Main electronic expansion valve (EV1)	480 pls	—
Subcooling electronic expansion valve (EV3)	PI control	—
Hot gas bypass valve (SVP)	OFF	This valve turns on with low pressure protection control.

■ **Heating Operation**

Actuator	Operation	Remarks
Compressor	Compressor PI control	Used for high pressure protection control, low pressure protection control, discharge pipe temperature protection control, and compressor operating frequency upper limit control with inverter protection control.
Outdoor unit fan	STEP 7 or 8	—
Four way valve	ON	—
Main electronic expansion valve (EV1)	PI control	—
Subcooling electronic expansion valve (EV3)	PI control	—
Hot gas bypass valve (SVP)	OFF	This valve turns on with low pressure protection control.

★Heating operation is not functional at an outdoor air temperature of 24°CDB or more.

2.2 Compressor PI Control

Compressor PI Control

Carries out the compressor capacity PI control to maintain Te at constant during cooling operation and Tc at constant during heating operation to ensure stable unit performance.

[Cooling operation]

Controls compressor capacity to adjust Te to achieve target value (TeS).

Te setting (Set in Set-up mode 2)

L	M (Normal) (factory setting)	H
3	6	9

Te : Low pressure equivalent saturation temperature (°C)

TeS : Target Te value
(Varies depending on Te setting, operating frequency, etc.)

[Heating operation]

Controls compressor capacity to adjust Tc to achieve target value (TcS).

Tc setting

L	M (Normal) (factory setting)	H
43	46	49

Tc : High pressure equivalent saturation temperature (°C)

TcS : Target Tc value
(Varies depending on Tc setting, operating frequency, etc.)

RXYSQ4 · 5 · 6PA

STn	INV(Fullload)	INV(Unload)
1		36.0Hz
2		39.0Hz
3		43.0Hz
4		47.0Hz
5		52.0Hz
6	52.0Hz	57.0Hz
7	57.0Hz	64.0Hz
8	62.0Hz	71.0Hz
9	68.0Hz	78.0Hz
10	74.0Hz	

STn	INV(Fullload)	INV(Unload)
11	80.0Hz	
12	86.0Hz	
13	92.0Hz	
14	98.0Hz	
15	104.0Hz	
16	110.0Hz	
17	116.0Hz	
18	122.0Hz	
19	128.0Hz	
20	134.0Hz	

STn	INV(Fullload)	INV(Unload)
21	140.0Hz	
22	146.0Hz	
23	152.0Hz	
24	158.0Hz	
25	164.0Hz	
26	170.0Hz	
27	175.0Hz	
28	180.0Hz	
29	185.0Hz	
30	190.0Hz	
31	195.0Hz	

∗ Compressors may operate in a pattern other than those listed in above tables subject to the operating conditions. Selection of full load operation to/from unload operation is made with the unload circuit solenoid valve (Y3S=SVUL). The full load operation is performed with the SVUL set to OFF, while the unload operation is performed with the SVUL set to ON.

2.3 Electronic Expansion Valve PI Control

Main Electronic Expansion Valve EV1 Control

Carries out the electronic expansion valve (Y1E) PI control to maintain the evaporator outlet superheated degree (SH) at constant during heating operation to make maximum use of the outdoor unit heat exchanger (evaporator).

SH = Ts1 - Te

SH : Evaporator outlet superheated degree (°C)

Ts1 : Suction pipe temperature detected by thermistor R3T (°C)

Te : Low pressure equivalent saturation temperature (°C)

The optimum initial value of the evaporator outlet superheated degree is 3°C, but varies depending on the discharge pipe superheated degree of inverter compressor.

Subcooling Electronic Expansion Valve EV3 Control

Makes PI control of the electronic expansion valve (Y3E) to keep the superheated degree (SH) of the outlet gas pipe on the evaporator side for the full use of the subcooling heat exchanger.

SH = Tsh -Te

SH : Outlet superheated degree of evaporator (°C)

Tsh : Suction pipe temperature detected with the thermistor R4T (°C)

Te : Low pressure equivalent saturation temperature (°C)

2.4 Cooling Operation Fan Control

In cooling operation with low outdoor air temperature, this control is used to provide the adequate amount of circulation air with liquid pressure secured by high pressure control using outdoor unit fan.
Furthermore, when outdoor temperature ≥ 20°C, the compressor will run in Step 7 or higher.
When outdoor temperature ≥ 18°C, it will run in Step 5 or higher.
When outdoor temperature ≥ 12°C, it will run in Step 1 or higher.

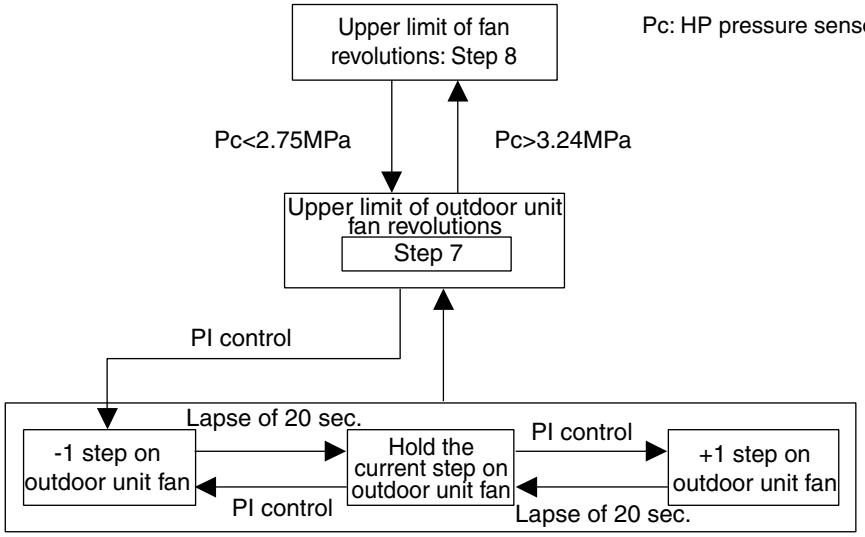

Fan Steps

Cooling	M1F	M2F
STEP0	0 rpm	0 rpm
STEP1	250 rpm	0 rpm
STEP2	400 rpm	0 rpm
STEP3	285 rpm	250 rpm
STEP4	360 rpm	325 rpm
STEP5	445 rpm	410 rpm
STEP6	580 rpm	545 rpm
STEP7	715 rpm	680 rpm
STEP8	850 rpm	815 rpm

3. Special Control

3.1 Startup Control

This control is used to equalize the pressure in the front and back of the compressor prior to the startup of the compressor, thus reducing startup loads. Furthermore, the inverter is turned ON to charge the capacitor.
In addition, to avoid stresses to the compressor due to oil return or else after the startup, the following control is made and the position of the four way valve is also determined. To position the four way valve, the master and slave units simultaneously start up.

3.1.1 Startup Control in Cooling Operation

Thermostat ON

	Pressure equalization control prior to startup	Startup control	
		STEP1	STEP2
Compressor	0 Hz	57 Hz Unload	57 Hz Unload +2 steps/20 sec. (until Pc - Pe>0.39MPa is achieved)
Outdoor unit fan	STEP7	Ta<20°C: OFF Ta≥20°C: STEP4	+1 step/15 sec. (when Pc>2.16MPa) -1 step/15 sec. (when Pc<1.77MPa)
Four way valve (20S1)	Holds	OFF	OFF
Main electronic expansion valve (EV1)	0 pls	480 pls	480 pls
Subcooling electronic expansion valve (EV3)	0 pls	0 pls	0 pls
Hot gas bypass valve (SVP)	OFF	OFF	OFF
Ending conditions	OR • Pc - Pe<0.3MPa • A lapse of 1 to 5 min.	A lapse of 10 sec.	OR • A lapse of 130 sec. • Pc - Pe>0.39MPa

3.1.2 Startup Control in Heating Operation

Thermostat ON

	Pressure equalization control prior to startup	Startup control	
		STEP1	STEP2
Compressor	0 Hz	57 Hz Unload	57 Hz Unload +2 steps/20 sec. (until Pc - Pe>0.39MPa is achieved)
Outdoor unit fan	From starting ~ 1 min. : STEP 7 1 ~ 3 min. : STEP 3 3 ~ 5 min. : OFF	STEP8	STEP8
Four way valve	Holds	ON	ON
Main electronic expansion valve (EV1)	0 pls	0 pls	0 pls
Subcooling electronic expansion valve (EV3)	0 pls	0 pls	0 pls
Hot gas bypass valve (SVP)	OFF	OFF	OFF
Ending conditions	OR • Pc - Pe<0.3MPa • A lapse of 1 to 5 min.	A lapse of 10 sec.	OR • A lapse of 130 sec. • Pc>2.70MPa • Pc - Pe>0.39MPa

3.2 Oil Return Operation

In order to prevent the compressor from running out of oil, the oil return operation is conducted to recover oil flown out from the compressor to the system side.

3.2.1 Oil Return Operation in Cooling Operation

[Start conditions]

Referring to the set conditions for the following items, start the oil return operation in cooling.

- Cumulative oil feed rate
- Timer setting (Make this setting so as to start the oil return operation when the initial cumulative operating time reaches two hours after power supply is turned ON and then every eight hours.)

Furthermore, the cumulative oil feed rate is computed from Tc, Te, and compressor loads.

Outdoor unit actuator	Oil return preparation operation	Oil return operation	Post-oil-return operation
Compressor	Take the current step as the upper limit.	52 Hz Full load (→ Low pressure constant control)	Same as the “oil return operation” mode.
Outdoor unit fan	Fan control (Normal cooling)	Fan control (Normal cooling)	Fan control (Normal cooling)
Four way valve	OFF	OFF	OFF
Main electronic expansion valve (EV1)	480 pls	480 pls	480 pls
Subcooling electronic expansion valve (EV3)	SH control	0 pls	0 pls
Hot gas bypass valve (SVP)	OFF	OFF	OFF
Ending conditions	20 sec.	or • 3 min. • Ts - Te<5°C	or • 3 min. • Pe<0.6MPa • HTdi>110°C

Indoor unit actuator		Cooling oil return operation
Fan	Thermostat ON unit	Remote Control setting
	Stopping unit	OFF
	Thermostat OFF unit	Remote Control setting
Electronic expansion valve	Thermostat ON unit	Normal opening
	Stopping unit	224 pls
	Thermostat OFF unit	Normal opening with forced thermostat ON

3.2.2 Oil Return Operation in Heating Operation

[Conditions to start]

The heating oil-returning operation is started referring following conditions.

- Integrated amount of displaced oil
- Timer
  (After the power is turned on, integrated operating-time is 2 hours and subsequently every 8 hours.)
  In addition, integrated amount of displaced oil is derived from Tc, Te, and the compressor load.

Outdoor Unit Actuator	Oil return preparation operation	Oil return operation	Post-oil-return operation
Compressor	Upper limit control	140 Hz Full load	2-step increase from 36 Hz Unload to (Pc - Pe>0.4 MPa) every 20 sec.
Outdoor unit fan	STEP8	OFF	STEP8
Four way valve	ON	OFF	ON
Main electronic expansion valve (EV1)	SH control	480 pls	55 pls
Subcooling electronic expansion valve (EV3)	0 pls	0 pls	0 pls
Hot gas bypass valve (SVP)	OFF	OFF	OFF
Ending conditions	2 min.	or [• 12 min. &[• Ts1 - Te<5°C • Tb>11°C]	or [• 160 sec. • Pc - Pe>0.4MPa]

* From the preparing oil-returning operation to the oil-returning operation, and from the oil-returning operation to the operation after oil-returning, the compressor stops for 1 minute to reduce noise on changing of the four way valve.

Indoor unit actuator		Heating oil return operation
Fan	Thermostat ON unit	OFF
	Stopping unit	OFF
	Thermostat OFF unit	OFF
Electronic expansion valve	Thermostat ON unit	416 pls
	Stopping unit	256 pls
	Thermostat OFF unit	416 pls

3.3 Defrosting Operation

The defrost operation is performed to solve frost on the outdoor unit heat exchanger when heating, and the heating capacity is recovered.

[Conditions to start]

The defrost operation is started referring following conditions.

- Outdoor heat exchanger heat transfer co-efficiency
- Temperature of heat-exchange (Tb)
- Timer (2 hours at the minimum)
  In addition, outdoor heat-exchange co-efficiency is derived from Tc, Te, and the compressor load.

Outdoor unit actuator	Defrost preparation operation	Defrost operation	Post Defrost operation
Compressor	Upper limit control	140 Hz Full load	2-step increase from 36 Hz Unload to (Pc - Pe>0.4 MPa) every 20 sec.
Outdoor unit fan	STEP8	OFF	STEP8
Four way valve	ON	OFF	ON
Main electronic expansion valve (EV1)	SH control	480 pls	55 pls
Subcooling electronic expansion valve (EV3)	0 pls	0 pls	0 pls
Hot gas bypass valve (SVP)	OFF	ON	ON
Ending conditions	2 min.	or [• 15 min. &{• Tb>11°C • Ts1 - Te<5°C]	or [• 160 sec. • Pc - Pe>0.4MPa]

* From the preparing operation to the defrost operation, and from the defrost operation to the operation after defrost, the compressor stops for 1 minute to reduce noise on changing of the four way valve.

Indoor unit actuator		Heating oil return operation
Fan	Thermostat ON unit	OFF
	Stopping unit	OFF
	Thermostat OFF unit	OFF
Electronic expansion valve	Thermostat ON unit	416 pls
	Stopping unit	256 pls
	Thermostat OFF unit	416 pls

3.4 Pump-down Residual Operation

When activating compressor, if the liquid refrigerant remains in the heat-exchanger, the liquid enters into the compressor and dilutes oil therein resulting in decrease of lubricity.
Therefore, the pump-down residual operation is performed to collect the refrigerant in the heat-exchanger when the compressor is down.

3.4.1 Pump-down Residual Operation in Cooling Operation

Actuator	Pump-down residual operation Step 1	Pump-down residual operation Step 2
Compressor	124 Hz Full load	52 Hz Full load
Outdoor unit fan	Fan control	Fan control
Four way valve	OFF	OFF
Main electronic expansion valve (EV1)	480 pls	240 pls
Subcooling electronic expansion valve (EV3)	0 pls	0 pls
Hot gas bypass valve (SVP)	OFF	OFF
Ending conditions	2 sec.	2 sec.

3.4.2 Pump-down Residual Operation in Heating Operation

Actuator	Pump-down residual operation
Compressor	124 Hz Full load
Outdoor unit fan	STEP7
Four way valve	ON
Main electronic expansion valve (EV1)	0 pls
Subcooling electronic expansion valve (EV3)	0 pls
Hot gas bypass valve (SVP)	OFF
Ending conditions	4 sec.

3.5 Restart Standby

Restart is stood by force to prevent frequent power-on/off and to equalize pressure in the refrigerant system.

Actuator	Operation	Remarks
Compressor	OFF	—
Outdoor unit fan	Ta>30°C: STEP4 Ta≤30°C: OFF	—
Four way valve	Keep former condition.	—
Main electronic expansion valve (EV1)	0 pls	—
Subcooling electronic expansion valve (EV3)	0 pls	—
Hot gas bypass valve (SVP)	OFF	—
Ending conditions	2 min.	—

3.6 Stopping Operation

Operation of the actuator when the system is down, is cleared up.

3.6.1 When System is in Stop Mode

Actuator	Operation
Compressor	OFF
Outdoor unit fan	OFF
Four way valve	Keep former condition.
Main electronic expansion valve (EV1)	0 pls
Subcooling electronic expansion valve (EV3)	0 pls
Hot gas bypass valve (SVP)	OFF
Ending conditions	Indoor unit thermostat is turned ON.

4. Protection Control

4.1 High Pressure Protection Control

This high pressure protection control is used to prevent the activation of protection devices due to abnormal increase of high pressure and to protect compressors against the transient increase of high pressure.

[In cooling operation]

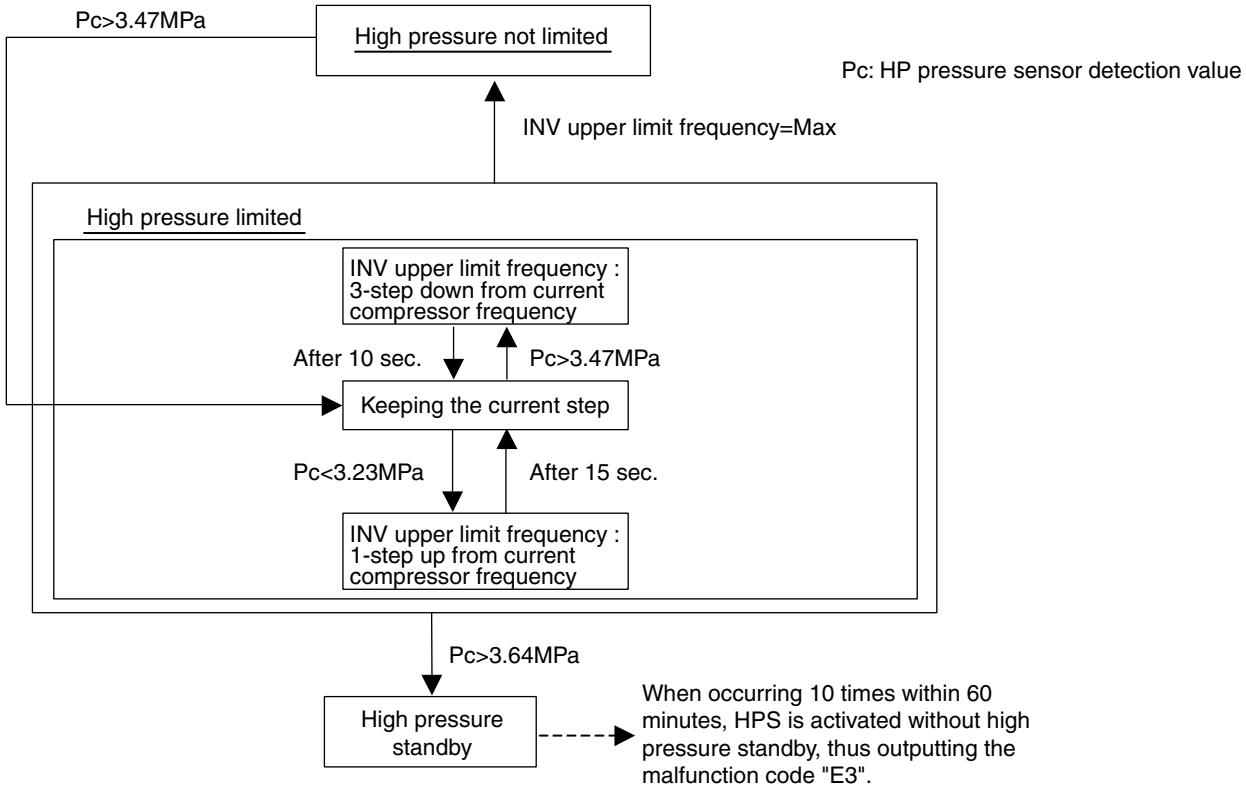

[In heating operation]

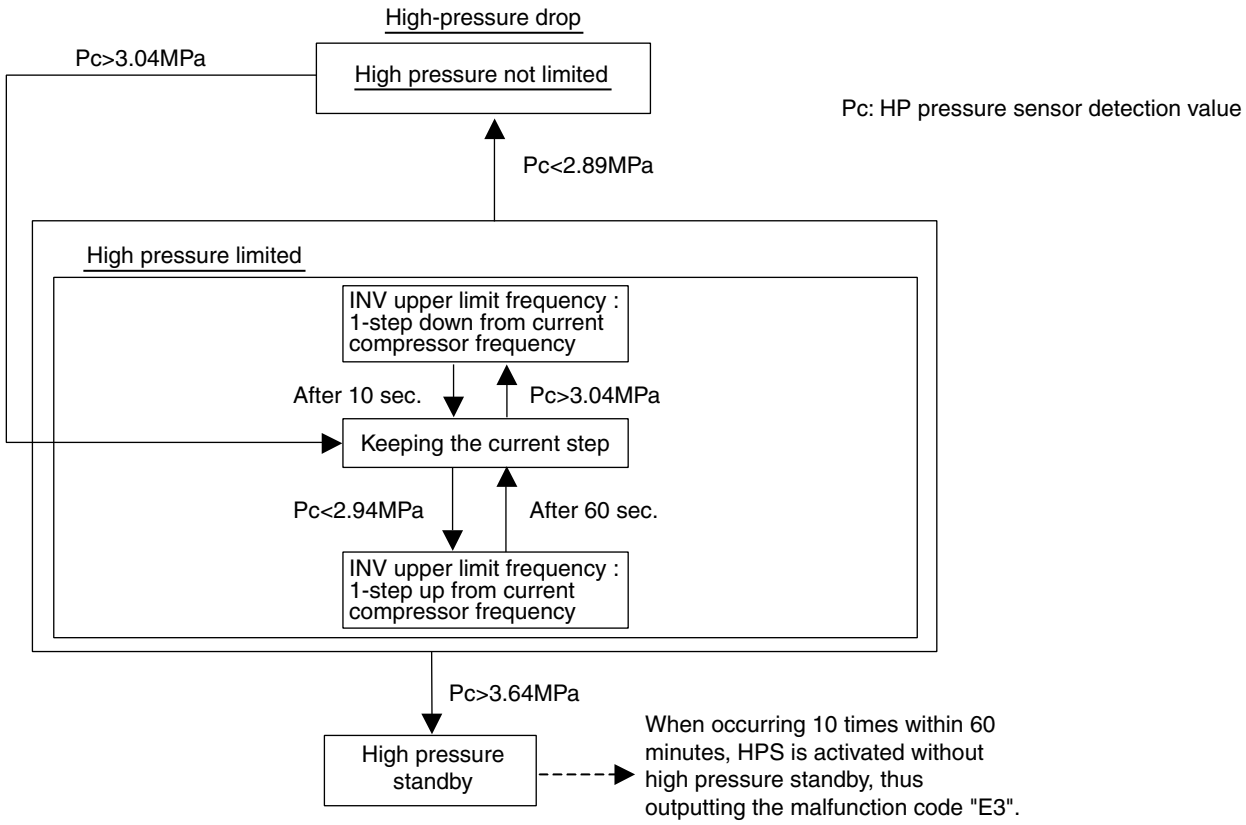

4.2 Low Pressure Protection Control

This low pressure protection control is used to protect compressors against the transient decrease of low pressure.

[In cooling operation]

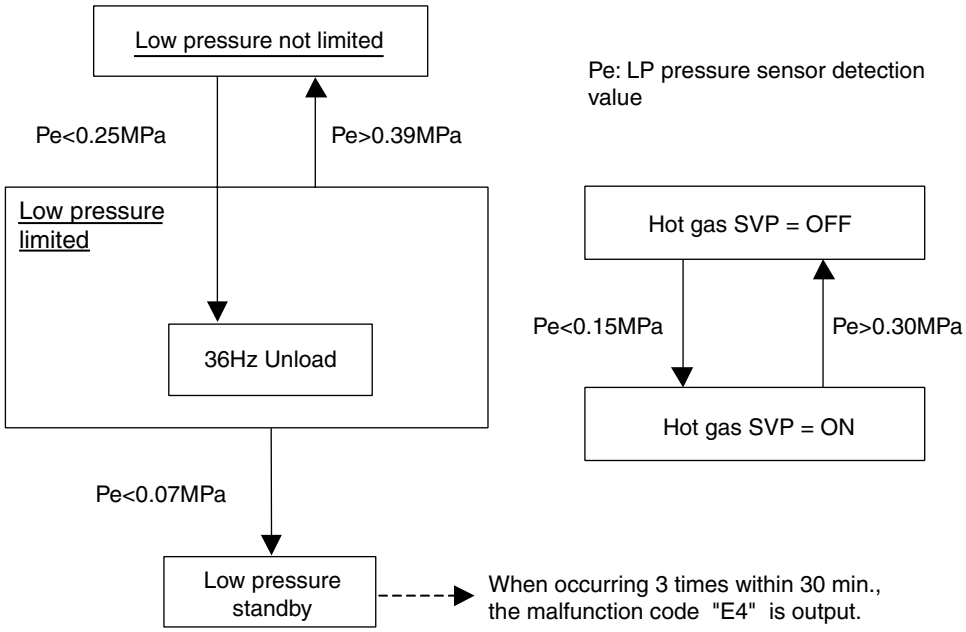

[In heating operation]

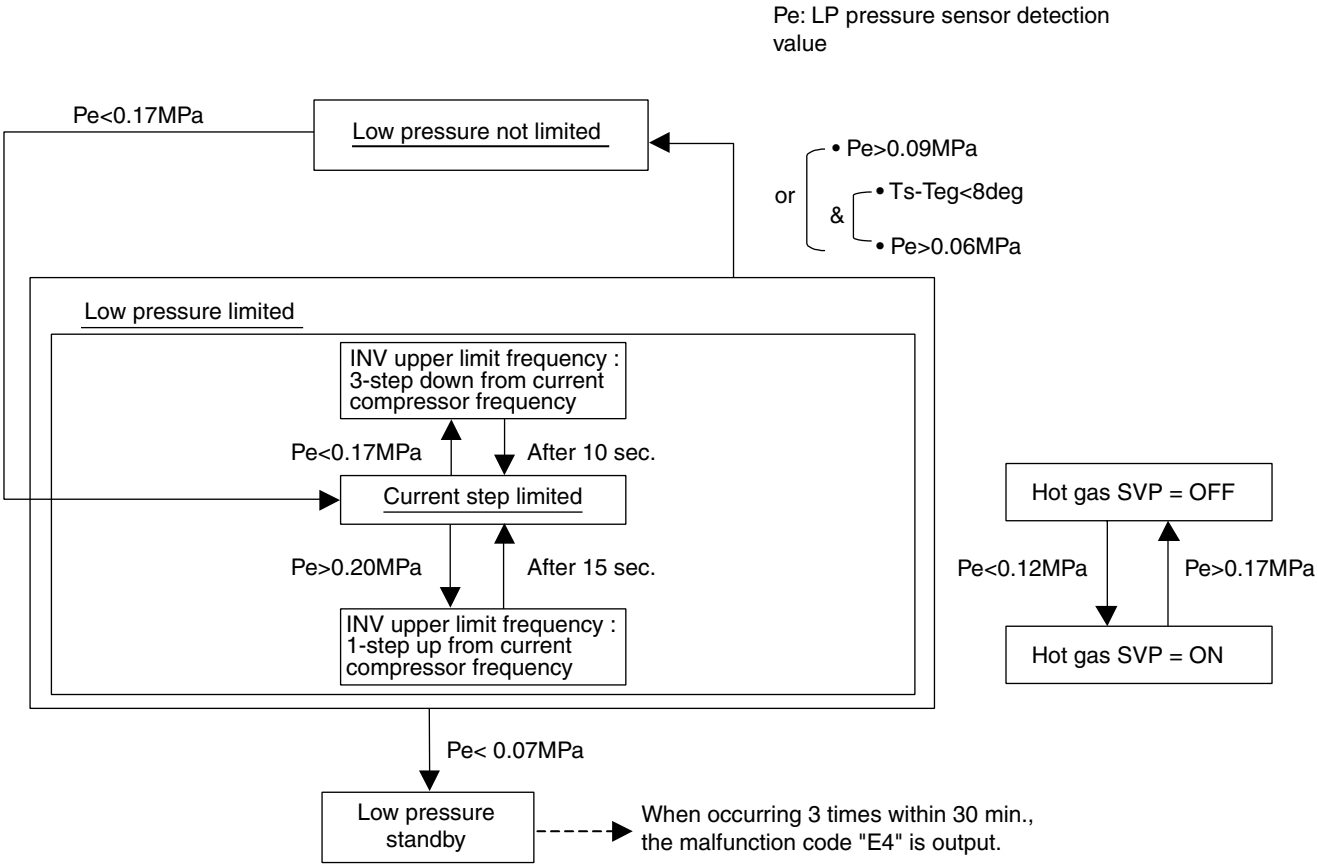

4.3 Discharge Pipe Protection Control

This discharge pipe protection control is used to protect the compressor internal temperature against a malfunction or transient increase of discharge pipe temperature.

[INV compressor]

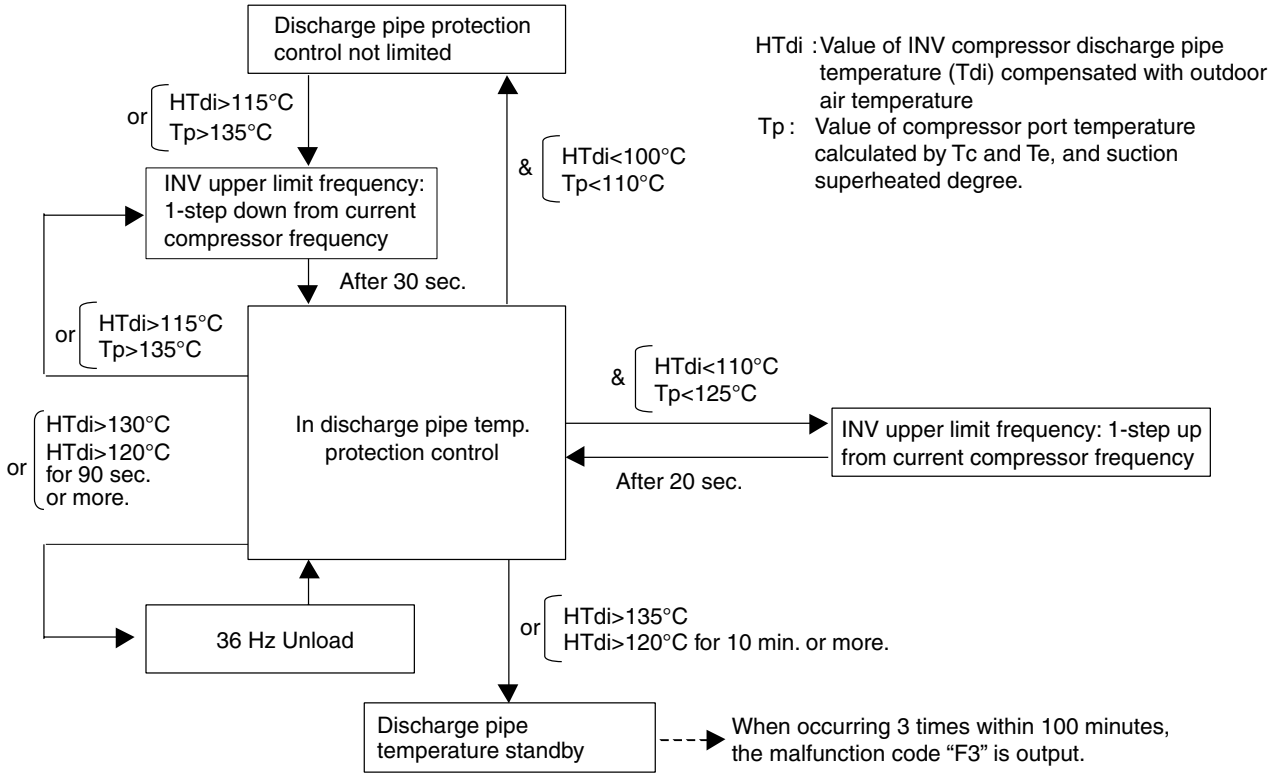

4.4 Inverter Protection Control

Inverter current protection control and inverter fin temperature control are performed to prevent tripping due to a malfunction, or transient inverter overcurrent, and fin temperature increase.

[Inverter overcurrent protection control]

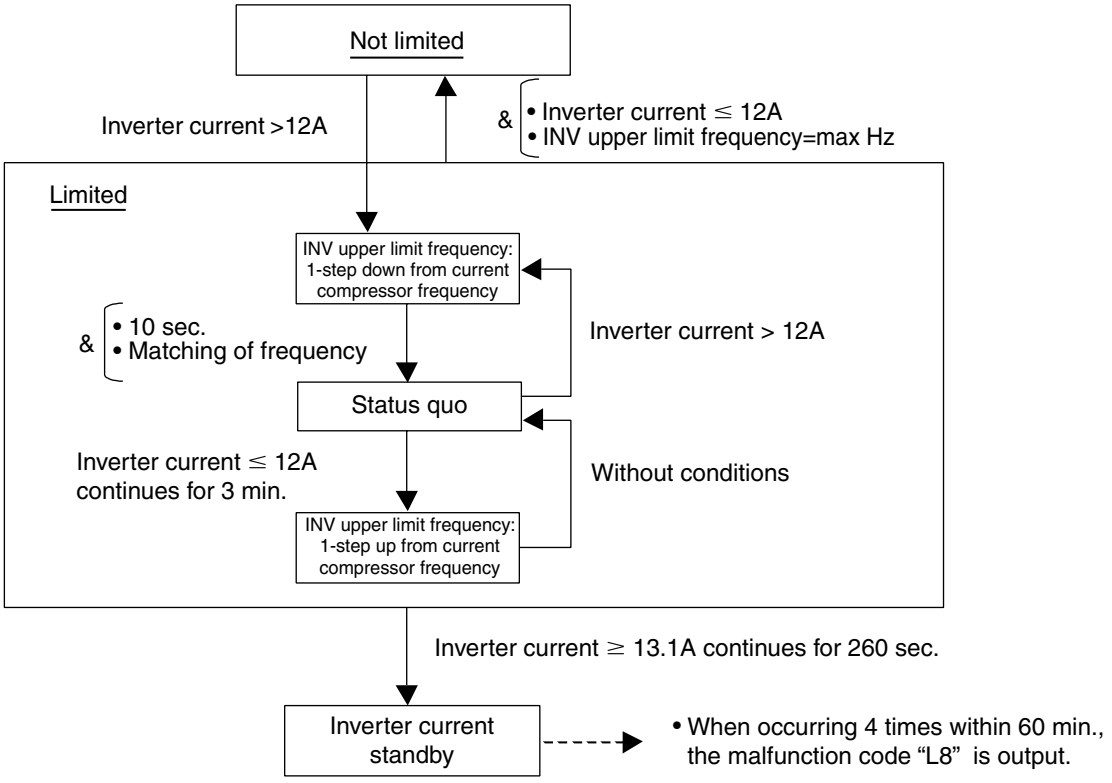

[Inverter fin temperature control]

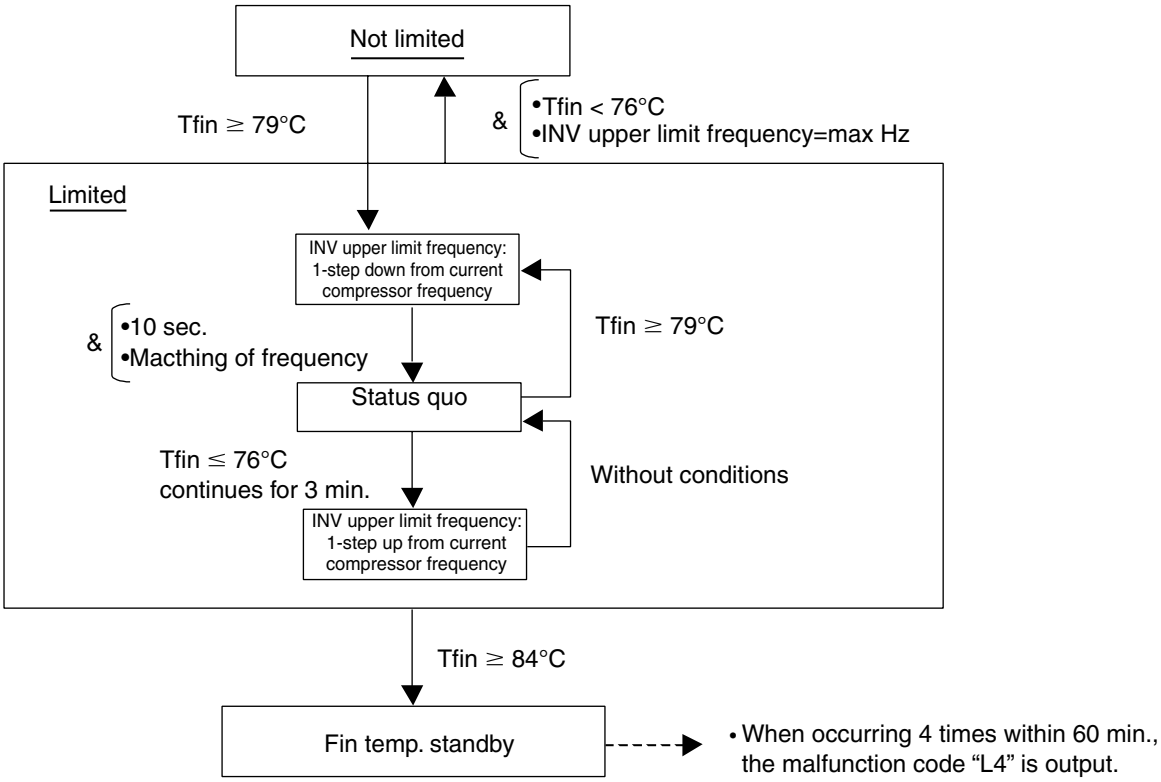

5. Other Control

5.1 Demand Operation

In order to save the power consumption, the capacity of outdoor unit is saved with control forcibly by using “Demand 1 Setting”.
To operate the unit with this mode, additional setting of “Continuous Demand Setting”.

[Demand 1 setting]

Setting	Standard for upper limit of power consumption
Demand 1 setting 1	Approx. 60%
Demand 1 setting 2 (factory setting)	Approx. 70%
Demand 1 setting 3	Approx. 80%

★ Other protection control functions have precedence over the above operation.

5.2 Heating Operation Prohibition

Heating operation is prohibited above 24°CDB outdoor air temperature.

6. Outline of Control (Indoor Unit)

6.1 Drain Pump Control

1. The drain pump is controlled by the ON/OFF buttons (4 button (1) - (4) given in the figure below).

6.1.1 When the Float Switch is Tripped while the Cooling Thermostat is ON:

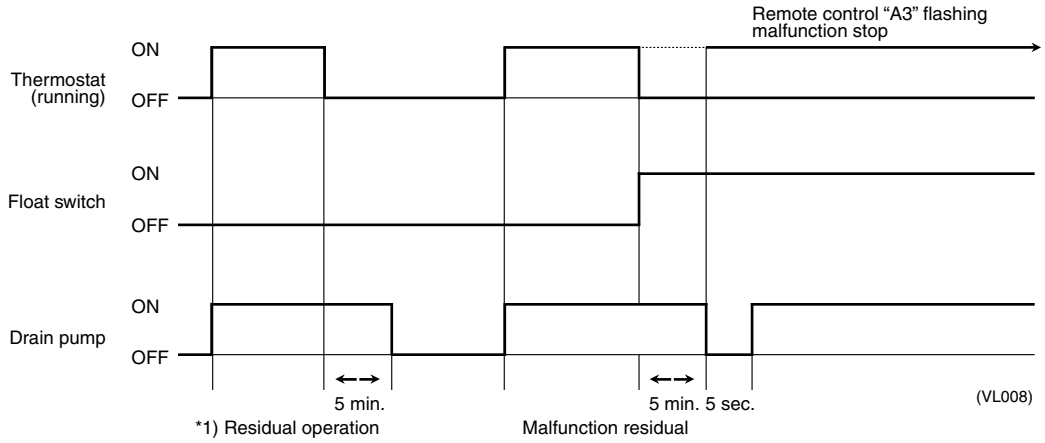

∗ 1. The objective of residual operation is to completely drain any moisture adhering to the fin of the indoor unit heat exchanger when the thermostat goes off during cooling operation.

6.1.2 When the Float Switch is Tripped while the Cooling Thermostat is OFF:

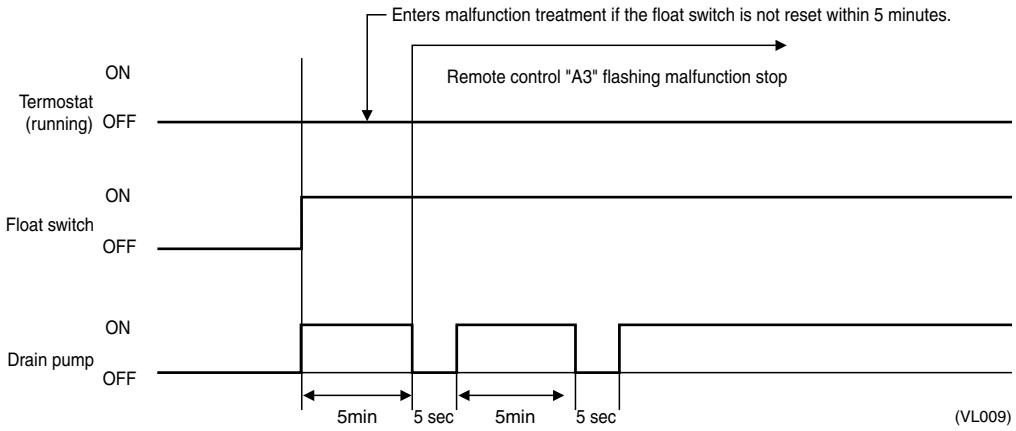

6.1.3 When the Float Switch is Tripped During Heating Operation:

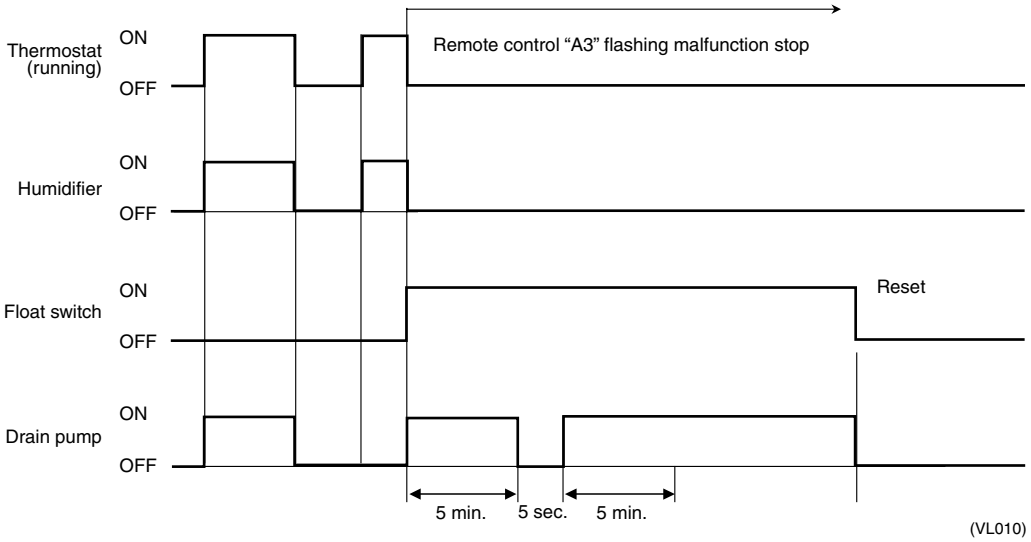

During heating operation, if the float switch is not reset even after the 5 minutes operation, 5 seconds stop, 5 minutes operation cycle ends, operation continues until the switch is reset.

6.1.4 When the Float Switch is Tripped and "AF" is Displayed on the Remote Control:

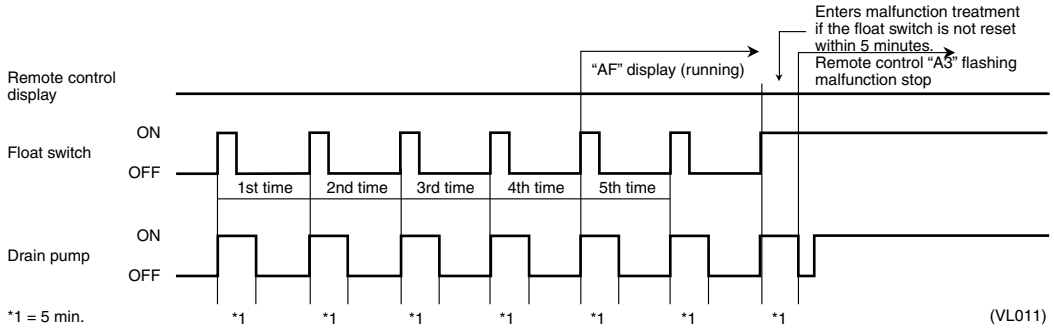

Note: If the float switch is tripped five times in succession, a drain malfunction is determined to have occurred. "AF" is then displayed as operation continues.

6.2 Louver Control for Preventing Ceiling Dirt

We have added a control feature that allows you to select the range of in which air direction can be adjusted in order to prevent the ceiling surrounding the air discharge outlet of ceiling mounted cassette type units from being soiled. (This feature is available on double flow, multi-flow and corner types.)

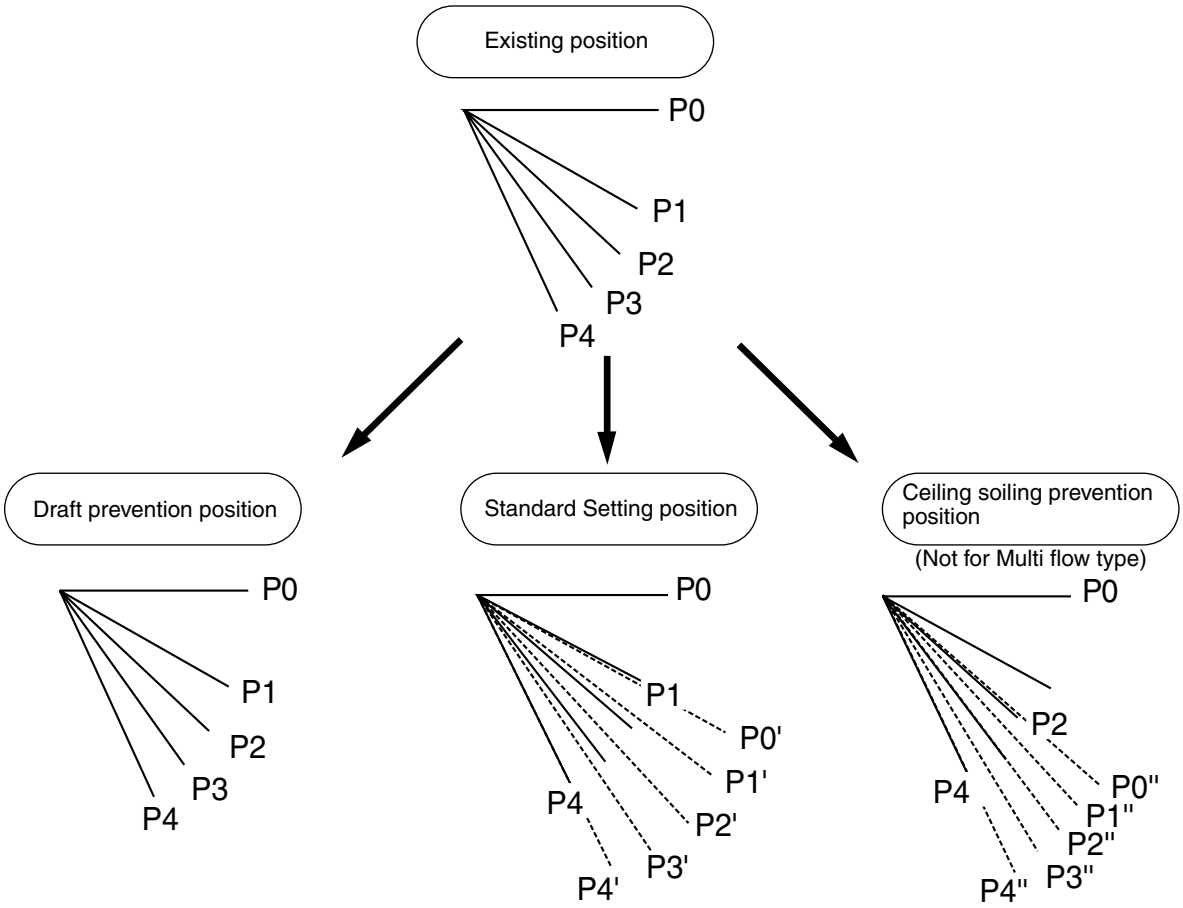

Draft prevention position	P0	P1	P2	P3	P4		Same as existing position
			Range of direction adjustment				
Standard position	Prohibited	P0'	P1'	P2'	P3'	P4'	Separated into 5 positions (P1 - 4)
			Range of direction adjustment				
Dirt prevention position	Prohibited		P0"	P1"	P2"	P3"	P4"	Separated into 5 positions (P2 - 4)

The factory set position is standard position. (VL012)

6.3 Thermostat Sensor in Remote Control

Temperature is controlled by both the thermostat sensor in Remote Control and air suction thermostat in the indoor unit. (This is however limited to when the field setting for the thermostat sensor in Remote Control is set to “Use.”)

Cooling

If there is a significant difference in the preset temperature and the suction temperature, fine adjustment control is carried out using a body thermostat sensor, or using the sensor in the Remote Control near the position of the user when the suction temperature is near the preset temperature.

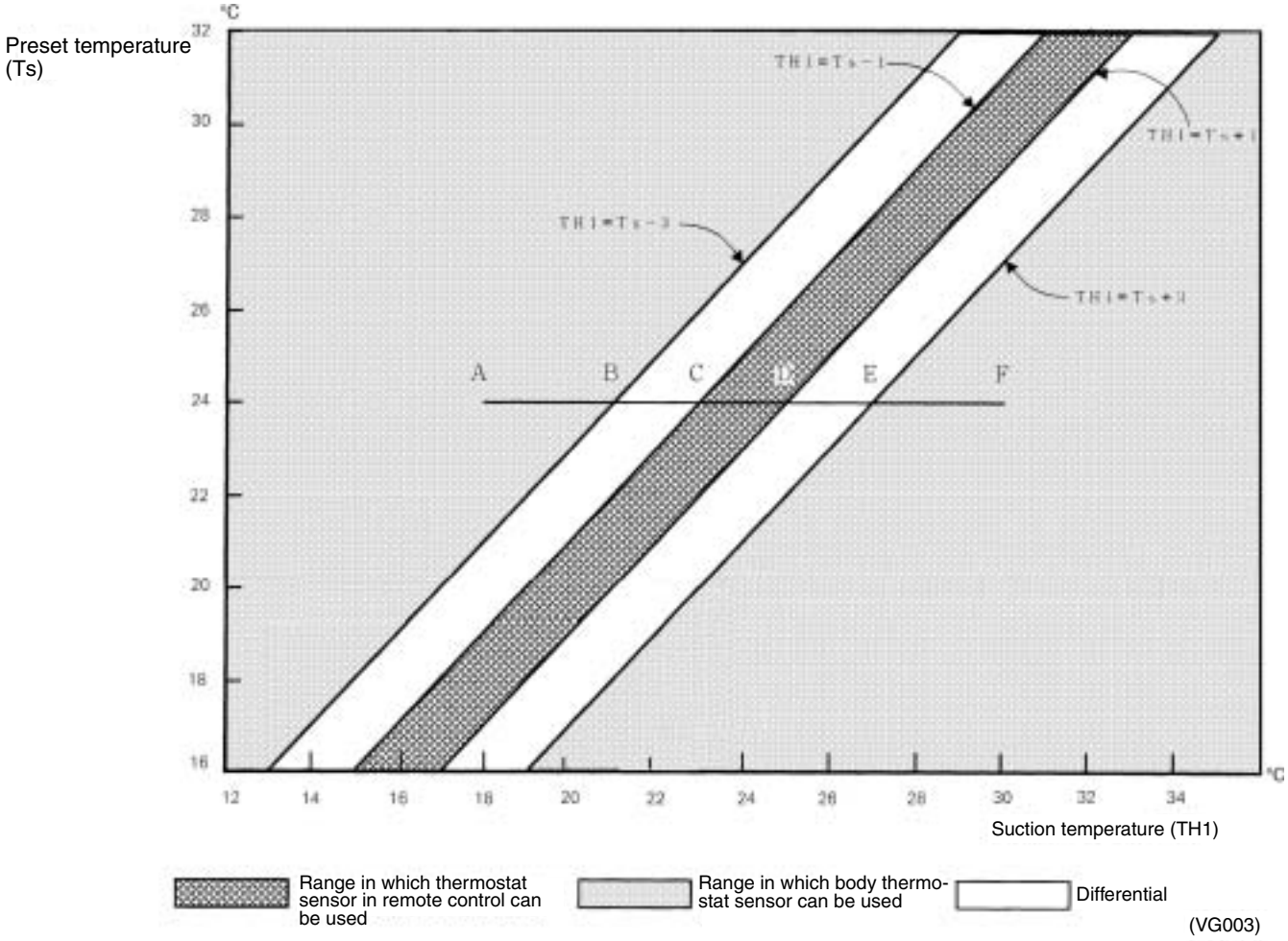

■ **Ex: When cooling**

Assuming the preset temperature in the figure above is 24°C, and the suction temperature has changed from 18°C to 30°C (A → F):

(This example also assumes there are several other air conditioners, the VRV system is off, and that temperature changes even when the thermostat sensor is off.)

Body thermostat sensor is used for temperatures from 18°C to 23°C (A → C).

Remote Control thermostat sensor is used for temperatures from 23°C to 27°C (C → E).

Body thermostat sensor is used for temperatures from 27°C to 30°C (E → F).

And, assuming suction temperature has changed from 30°C to 18°C (F → A):

Body thermostat sensor is used for temperatures from 30°C to 25°C (F → D).

Remote Control thermostat sensor is used for temperatures from 25°C to 21°C (D → B).

Body thermostat sensor is used for temperatures from 21°C to 18°C (B → A).

Heating

When heating, the hot air rises to the top of the room, resulting in the temperature being lower near the floor where the occupants are. When controlling by body thermostat sensor only, the unit may therefore be turned off by the thermostat before the lower part of the room reaches the preset temperature. The temperature can be controlled so the lower part of the room where the occupants are doesn't become cold by widening the range in which thermostat sensor in Remote Control can be used so that suction temperature is higher than the preset temperature.

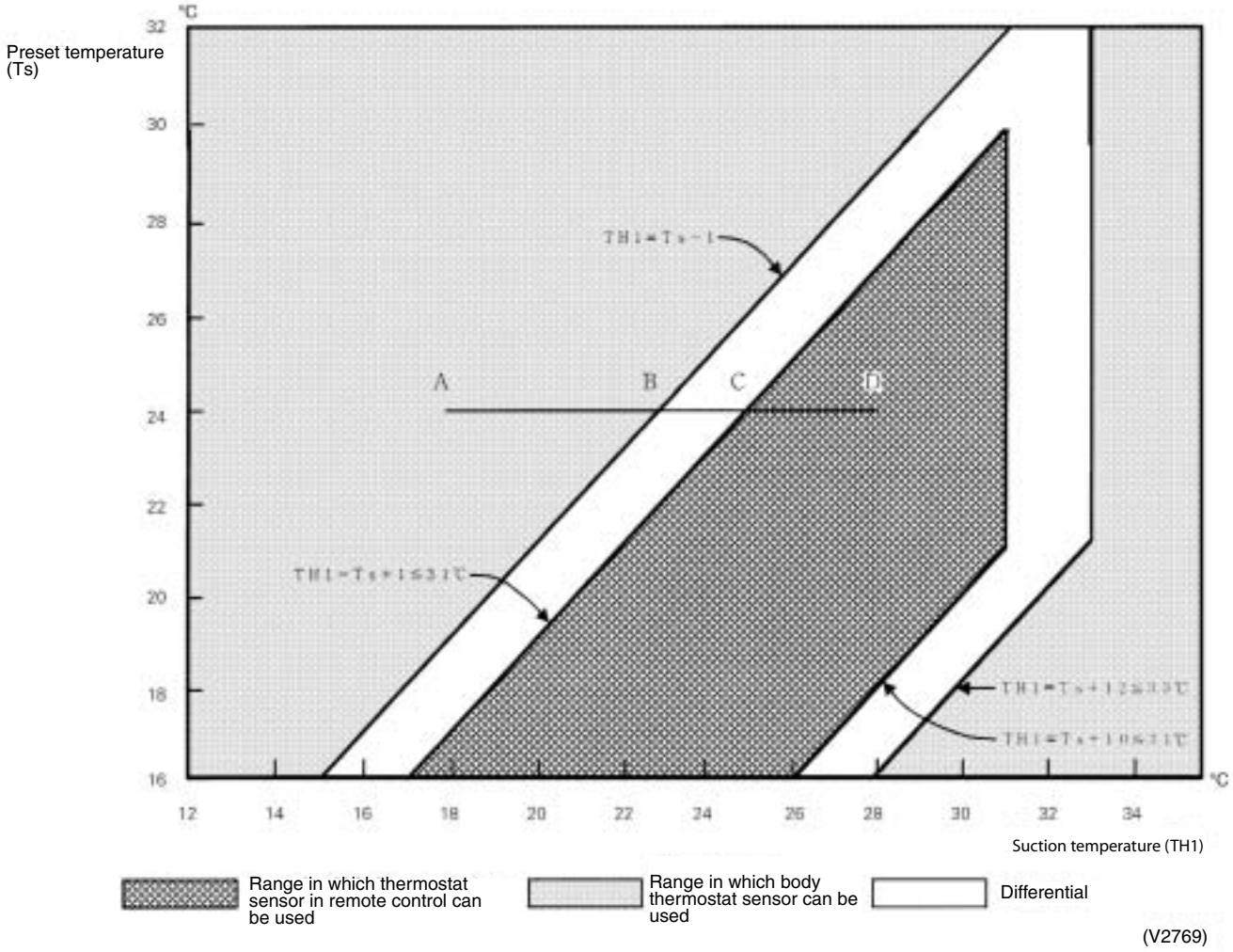

■ **Ex: When heating**

Assuming the preset temperature in the figure above is 24°C, and the suction temperature has changed from 18°C to 28°C (A → D):

(This example also assumes there are several other air conditioners, the VRV system is off, and that temperature changes even when the thermostat sensor is off.)

Body thermostat sensor is used for temperatures from 18°C to 25°C (A → C).

Remote Control thermostat sensor is used for temperatures from 25°C to 28°C (C → D).

And, assuming suction temperature has changed from 28°C to 18°C (D → A):

Remote Control thermostat sensor is used for temperatures from 28°C to 23°C (D → B).

Body thermostat sensor is used for temperatures from 23°C to 18°C (B → A).

6.4 Freeze Prevention

Freeze Prevention by Off Cycle (Indoor Unit)

When the temperature detected by liquid pipe temperature thermistor (R2T) of the indoor unit heat exchanger drops too low, the unit enters freeze prevention operation in accordance with the following conditions, and is also set in accordance with the conditions given below.

Conditions for starting freeze prevention: Temperature is –1°C or less for total of 40 min., or temperature is –5°C or less for total of 10 min.
Conditions for stopping freeze prevention: Temperature is +7°C or more for 10 min. continuously

Ex: Case where temperature is –5°C or less for total of 10 min.

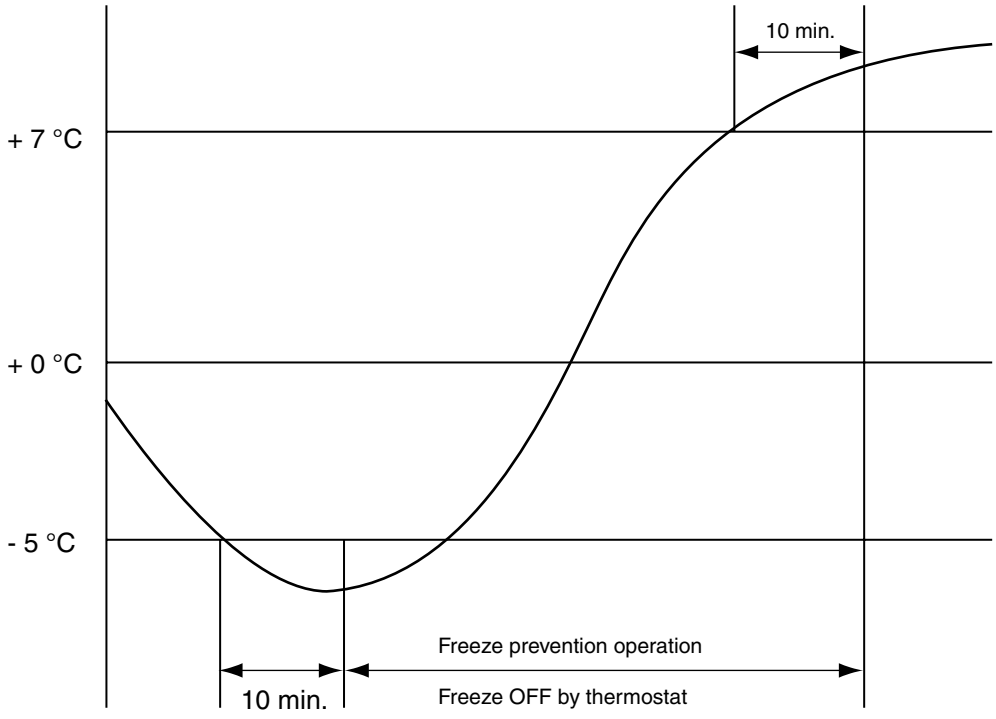

(VG005)

6.5 View of Operations of Swing Flaps

Swing flaps work as following.

			Fan	Flap control		
				FXFQ	FXCQ FXKQ FXHQ	FXAQ
Heating	Hot-start from defrosting	Swinging	OFF	Level	Level	Level
		Setting the wind direction	OFF	Level	Level	Level
	Defrosting	Swinging	OFF	Level	Level	Level
		Setting the wind direction	OFF	Level	Level	Level
	Thermostat is off	Swinging	LL	Level	Level	Level
		Setting the wind direction	LL	Level	Level	Level
	Hot-start from the state that the thermostat is off	Swinging	LL	Level	Level	Level
		Setting the wind direction	LL	Level	Level	Level
	Halt	Swinging	OFF	Level	Level	Level
		Setting the wind direction	OFF	Level	Level	Level
Cooling	Thermostat of microcomputer-dry is on	Swinging	L*1	Swinging	Swinging	Swinging
		Setting the wind direction	L*1	Set up	Set up	Set up
	Thermostat of microcomputer-dry is off	Swinging	OFF or L	Swinging	Swinging	Swinging
		Setting the wind direction		Set up	Set up	Set up
	Cooling thermostat is off	Swinging	Set up	Swinging	Swinging	Swinging
		Setting the wind direction	Set up	Set up	Set up	Set up
	Halt	Swinging	OFF	Level	Level	Level
		Setting the wind direction	OFF	Set up	Level	Level
	Microcomputer is controlled (including the cooling state)	Swinging	L	Swinging	Swinging	Swinging
		Setting the wind direction	L	Set up	Set up	Set up

* 1. Only in FXFQ case, L or LL.

6.6 Electronic Expansion Valve Control

• Electronic expansion Valve Control

In cooling, to maximize the capacity of indoor unit heat exchanger (evaporator), operate the electronic expansion valve under PI control so that the evaporator outlet superheated degree (SH) will become constant.
In heating, to maximize the capacity of indoor unit heat exchanger (condenser), operate the electronic expansion valve under PI control so that the evaporator outlet superheated degree (Condenser outlet subcooled degree) will become constant.

Cooling $SH=TH_2-TH_1$	SH : Evaporator outlet superheated degree
(Heating $SC=TC-TH_1$)	TH_1: Temperature (°C) detected with the liquid thermistor
	TH_2: Temperature (°C) detected with the gas thermistor
	SC : Condenser outlet subcooled degree
	TC : High pressure equivalent saturated temperature

Furthermore, the default value of the optimal evaporator outlet superheated degree (condenser outlet subcooled degree) is 5 deg. However, this default value varies with the operating performance.

6.7 Hot Start Control (In Heating Operation Only)

At startup with thermostat ON or after the completion of defrosting in heating operation, the indoor unit fan is controlled to prevent cold air from blasting out and ensure startup capacity.
[Detail of operation]
When either the **start condition 1** or the **start condition 2** is established, the operations shown below will be conducted.

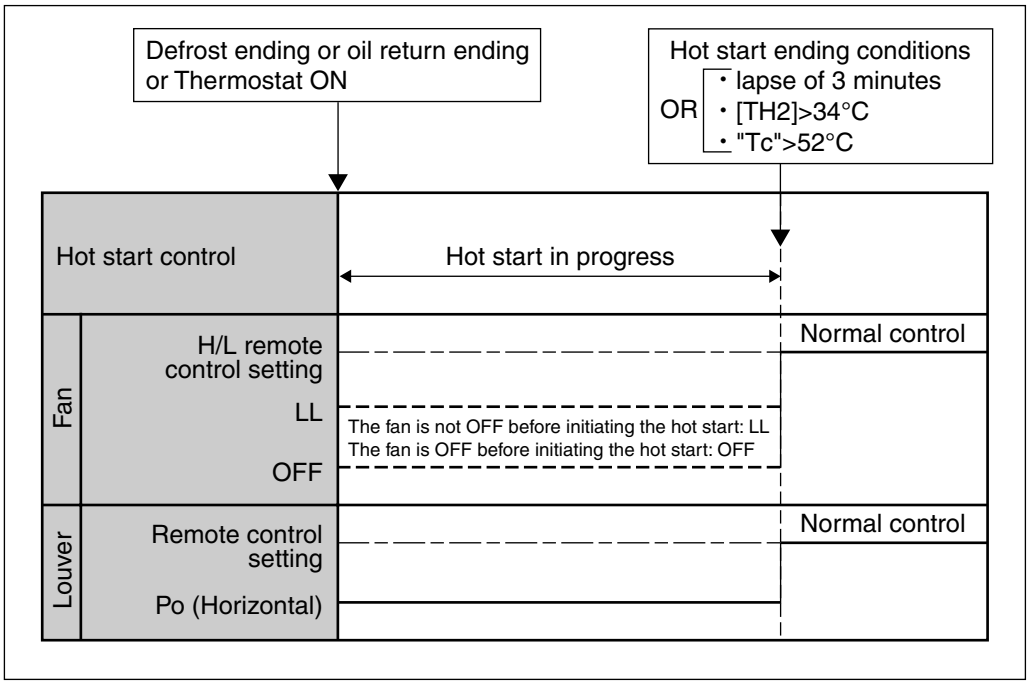

TH_2: Temperature (°C) detected with the gas thermistor
TC : High pressure equivalent saturated temperature

Part 6
Test Operation

1. Test Operation 74
   1.1 Procedure and Outline.....74
   1.2 Operation when Power is Turned On 85
2. Outdoor Unit PC Board Layout 86
3. Field Setting 87
   3.1 Field Setting from Remote Control 87
   3.2 Field Setting from Outdoor Unit 104

1. Test Operation

1.1 Procedure and Outline

Follow the following procedure to conduct the initial test operation after installation.

1.1.1 Check Work Prior to Turn Power Supply On

Check the below items.
- Power wiring
- Control transmission wiring between units
- Earth wire

○ Is the power supply three-phase 380-415V / 50Hz?
○ Have you finished a ductwork to drain?
○ Have you detach transport fitting?
○ Is the wiring performed as specified?
○ Are the designated wires used?
○ Is the grounding work completed?
Use a 500V megger tester to measure the insulation.
- Do not use a megger tester for other circuits than 380-415V circuit.

○ Are the setscrews of wiring not loose?
○ Is the electrical component box covered with an insulation cover completely?

⇩

Check on refrigerant piping

○ Is pipe size proper? (The design pressure of this product is 4.0MPa.)
○ Are pipe insulation materials installed securely?
Liquid and gas pipes need to be insulated. (Otherwise causes water leak.)
○ Are respective stop valves on liquid and gas line securely open?

⇩

Check on amount of refrigerant charge

○ Is refrigerant charged up to the specified amount?
If insufficient, charge the refrigerant from the service port of stop valve on the liquid side with outdoor unit in stop mode after turning power on.
○ Has the amount of refrigerant charge been recorded on “Record Chart of Additional Refrigerant Charge Amount”?

(V3180)

1.1.2 Turn Power On

Turn outdoor unit power on.

○ Be sure to turn the power on 6 hours before starting operation to protect compressors.
○ Close outside panels of the outdoor unit.

⇩

Turn indoor unit power on.

⇩

Carry out field setting on outdoor PC board

(V3056)

1.1.3 Air Tight Test and Vacuum Drying

- Air tight test: Make sure to use nitrogen gas.
- Pressurize the liquid and gas pipes to 4.0 MPa (40 bar) (do not pressurize more than 4.0 MPa (40 bar)). If the pressure does not drop within 24 hours, the system passes the test. If the pressure drops, check where the nitrogen leaks from.
- Vacuum drying: Use a vacuum pump which can evacuate to –100.7 kPa (5 Torr, –755 mm Hg)
  1. Evacuate the system from the liquid and gas pipes by using a vacuum pump for more than 2 hours and bring the system to –100.7 kPa. After keeping the system under that condition for more than 1 hour, check if the vacuum gauge rises or not. If it rises, the system may either contain moisture inside or have leaks.
  2. Following should be executed if there is a possibility of moisture remaining inside the pipe (if piping work is carried out during the raining season or over a long period of time, rainwater may enter the pipe during work).

After evacuating the system for 2 hours, pressurize the system to 0.05 MPa (vacuum break) with nitrogen gas and evacuate the system again using the vacuum pump for 1 hour to –100.7 kPa (vacuum drying). If the system cannot be evacuated to –100.7 kPa within 2 hours, repeat the operation of vacuum break and vacuum drying.
Then, after leaving the system in vacuum for 1 hour, confirm that the vacuum gauge does not rise.

1.1.4 Additional Refrigerant Charge

- Refrigerant cannot be charged until field wiring has been completed.
- Refrigerant may only be charged after performing the leak test and the vacuum drying (see above).
- When charging a system, care shall be taken that its maximum permissible charge is never exceeded, in view of the danger of liquid hammer.
- Charging with an unsuitable substance may cause explosions and accidents, so always ensure that the appropriate refrigerant (R-410A) is charged.
- Refrigerant containers shall be opened slowly.
- Always use protective gloves and protect your eyes when charging refrigerant.
- When performing service on the unit requiring the refrigerant system to be opened, refrigerant must be evacuated according to local regulations.
- Do not use the automatic refrigerant charging function while working on the indoor units. When using the automatic refrigerant charging function, the indoor units operate automatically as well as the outdoor unit.
- When the power is on, please close the front panel when leaving the unit.

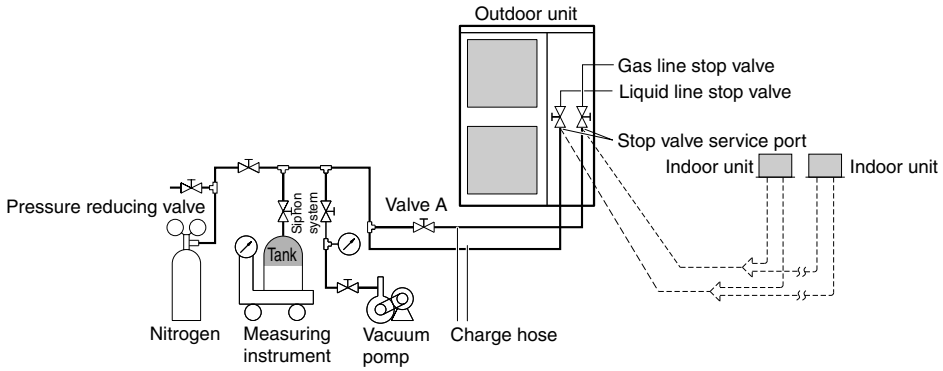

Fig. 6

To avoid compressor breakdown. Do not charge the refrigerant more than the specified amount.

- This outdoor unit is factory charged with refrigerant and depending on pipe sizes and pipe lengths some systems require additional charging of refrigerant. See "How to calculate the additional refrigerant to be charged" on page 249.
- In case re-charge is required, refer to the nameplate of the unit. The nameplate states the type of refrigerant and necessary amount.

Precautions when adding R-410A

Be sure to charge the specified amount of refrigerant in liquid state to the liquid pipe.

Since this refrigerant is a mixed refrigerant, adding it in gas form may cause the refrigerant composition to change, preventing normal operation.

- Before charging, check whether the refrigerant cylinder is equipped with a siphon tube or not.

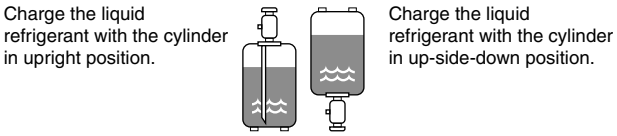

1.1.4.1 Important information regarding the refrigerant used

This product contains fluorinated greenhouse gases covered by the Kyoto Protocol. Do not vent gases into the atmosphere.

Refrigerant type: R-410A

GWP(1) value: 1975

(1) GWP = global warming potential

Please fill in with indelible ink,

- ① the factory refrigerant charge of the product,
- ② the additional refrigerant amount charged in the field and
- ① + ② the total refrigerant charge

on the refrigerant charge label supplied with the product.

The filled out label must be adhered in the proximity of the product charging port (e.g. onto the inside of the service cover).

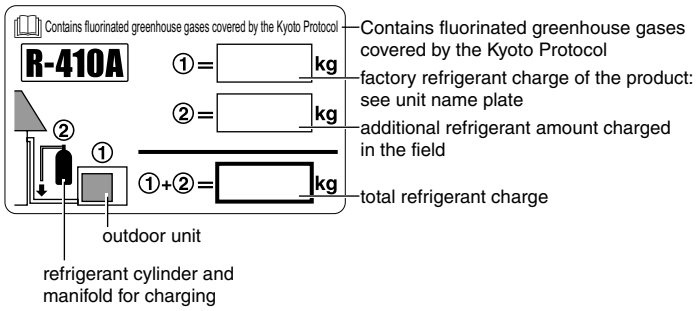

1.1.4.2 Procedures for adding refrigerant

Procedure 1: Adding refrigerant by using the automatic refrigerant charging function (recommended)

How to connect the tank?

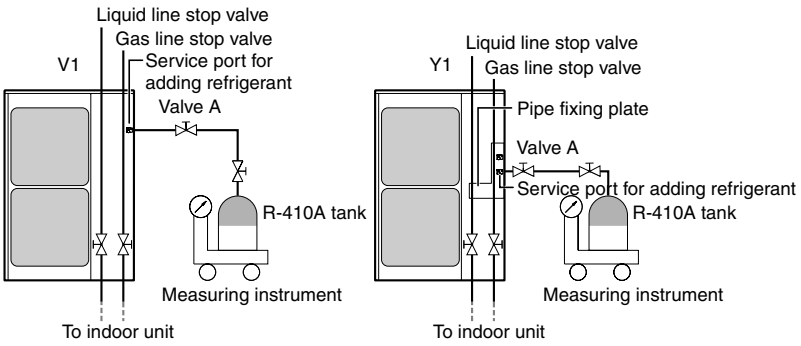

When the refrigerant tank is connected and the specified operation is performed, the appropriate amount of refrigerant will be charged into the system. After charging, the system will stop automatically. The refrigerant must be charged according to the procedure described below.

Caution

- Make sure to turn ON the power 6 hours before starting the operation. This is necessary to warm the crankcase by the electric heater.
- Automatic charging is able to charge 6 kg/hour refrigerant at an outside temperature of 0°C to 24 kg/hour refrigerant at an outside temperature of 35°C.
  The charging time depends on the amount of charged refrigerant and on the outside temperature.
- Automatic refrigerant charging is NOT possible if the following restrictions are exceeded:
  - Outside temperature: 0°C DB~43°C DB
  - Indoor temperature: 0°C DB~32°C DB
  - Indoor unit connection capacity: 50%~130%

Automatic refrigerant charging procedure

1. Open the liquid and gas side stop valves completely.

Note that valve A must be closed!

2. Turn on the power of the outdoor unit and indoor units.

Note When an indoor unit is connected to the refrigerant system and the indoor unit is turned off, automatic charging will fail.

3. Make sure that the led on the PCB on the outdoor unit are as shown in the table below. This indicates that the system is operating normally.

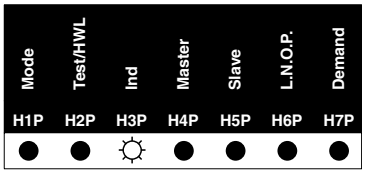

Led state

Throughout the manual the state of the leds is indicated as follows:

☼	OFF
●	ON
◑	blinking
*	ON or OFF

If H2P is lit up, check the type of error based on the error code in the remote control and correct the error in accordance with “1.1.5 Check Operation” on page 82.

4. Automatically charge the refrigerant according to the procedure described below.

Warning Do not touch anything else than the push-buttons (BS1~5) on the PCB when making the settings. These settings must be done with the power on

4.1 Press **BS4 TEST** once.

H1P	H2P	H3P	H4P	H5P	H6P	H7P
☼	☼	☼	☼	☼	☼	☼

4.2 Press **BS4 TEST** for 5 seconds. The unit will start running.

H1P	H2P	H3P	H4P	H5P	H6P	H7P
●	◑	●	●	●	*	*

If the led display below appears, the automatic refrigerant charging restriction has been exceeded. Additional refrigerant must be charged by calculating the additional refrigerant charging amount.

H1P	H2P	H3P	H4P	H5P	H6P	H7P
☼	◑	◑	◑	☼	●	●

Description of error
Inappropriate outdoor temperature

or

H1P	H2P	H3P	H4P	H5P	H6P	H7P
☼	◑	◑	◑	●	☼	●

Description of error
Inappropriate indoor temperature

If the led display below appears, check the indoor unit connection capacity.

H1P	H2P	H3P	H4P	H5P	H6P	H7P
☼	◑	◑	◑	◑	●	☼

Description of error
Inappropriate indoor unit connection capacity

If the led display below appears, the liquid and gas side stop valves may be closed.

H1P	H2P	H3P	H4P	H5P	H6P	H7P
☼	●	*	*	*	*	*

Description of error
Stop valve is closed

Note If you want to repeat the automatic refrigerant charging operation from step 4.1, fully open the liquid and gas side stop valves and press the **BS1 MODE** button once.

4.3 When the led indication becomes as shown in the table below in about 15 to 30 minutes after start of operation, open valve A at once to start charging of the refrigerant. Immediately after starting charging of the refrigerant by opening valve A, press **BS4 TEST** once. When **BS4 TEST** is not pressed within 10 minutes after the led indication is shown, charging is stopped.

H1P	H2P	H3P	H4P	H5P	H6P	H7P	Code on remote control
◑	◑	◑	●	☼	●	☼	PR

4.4 The led indication becomes as shown in the table below during automatic refrigerant charging.
During automatic refrigerant charging, the remote control indicates **TEST** (test operation) and (external control).

H1P	H2P	H3P	H4P	H5P	H6P	H7P
☼	◑	*	*	*	*	*

Note If the led display below appears, the refrigerant tank is empty. Replace the refrigerant tank, open valve A and re-charge.

H1P	H2P	H3P	H4P	H5P	H6P	H7P	Code on remote control
☼	◑	◑	●	●	☼	●	PA

The led indication becomes as shown in the table below when automatic refrigerant charging is about to end. Prepare to close the valve on the refrigerant tank.

H1P	H2P	H3P	H4P	H5P	H6P	H7P	Code on remote control
◑	◑	◑	☼	☼	☼	☼	PE

Note It is possible that the code PE is not shown on the remote control but this does not indicate a malfunction. The led indication can immediately shift to the situation as shown in "Case 1: Charging complete" on page 79.

4.5 When the led indication becomes as shown in the table below, quickly close valve A and follow instructions as described below.

Caution

- When adding refrigerant is done or when pausing, close the valve on the refrigerant tank immediately.
  More refrigerant might be charged by any remaining pressure after the machine is stopped.
- The outdoor fan may keep rotating a little bit more, but this does not indicate a malfunction.

Case 1: Charging complete

H1P	H2P	H3P	H4P	H5P	H6P	H7P	Code on remote control
☼	◑	◑	☼	☼	☼	☼	P9

Charging of the refrigerant is complete. Press **BS1 MODE** button once and go to step 5.

Case 2: Recharging operation

H1P	H2P	H3P	H4P	H5P	H6P	H7P	Code on remote control
☼	◑	◑	●	☼	☼	☼	P8

Press **BS1 MODE** button once and perform automatic refrigerant charging again starting from Step 4.1.

Case 3: Charging interrupted

H1P	H2P	H3P	H4P	H5P	H6P	H7P	Code on remote control
☼	◑	◑	●	●	●	☼	P2

Something is preventing normal operation:

- Is the gas side stop valve completely open?
- Are the valve on the refrigerant tank and valve A open?
  Check if the **BS4 TEST** button was pressed within 10 minutes after the valves were opened.
- Is the indoor unit air intake vent or outlet vent blocked?

After correcting the problem, press **BS1 MODE** button once and perform automatic refrigerant charging again starting from step 4.1.

Case 4: Failure

H1P	H2P	H3P	H4P	H5P	H6P	H7P	Error code on remote control
●	☼	☼	●	●	●	●	See footnote (*)

(*) An error in the system interrupted the operation of the unit. Check the error by using the error code displayed on the remote control. For an explanation of error codes, see "Error codes on the remote control" on page 75 and solve the problem.

After correcting the problem, press **BS1 MODE** button once and perform automatic refrigerant charging again starting from step 4.1.

5. When charging is complete, determine the weight of refrigerant that was added and fill in the amount in the "Additional refrigerant charge label" attached to service precautions plate on the unit.

6. After adding the refrigerant, do not forget to close the lid of the service port. The tightening torque for the lid is 11.5~13.9 N•m.

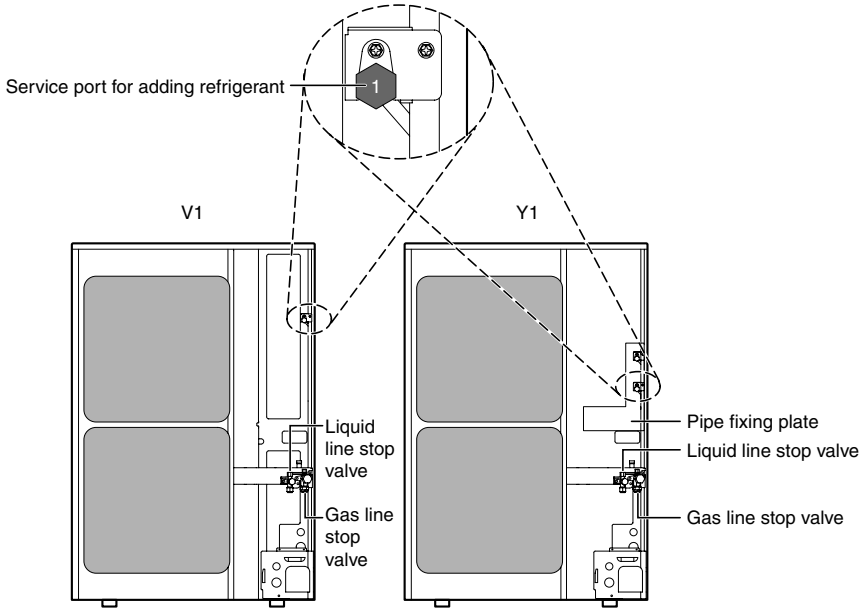

Procedure 2: Charging while the outdoor unit is at a standstill

See figure 6 on page 75.

1. Determine the weight of refrigerant to be charged additionally referring to the item "Additional refrigerant charge" in "How to calculate the additional refrigerant to be charged" on page 249 and fill in the amount in the "Additional refrigerant charge label" attached to the unit.

2. After the vacuum drying is finished, open valve A and charge the additional refrigerant in its liquid state through the service port on the liquid stop valve taking into account following instructions:
   - Turn on the power of the outdoor unit and indoor units.
   - Check that gas and liquid stop valves are closed.
   - Stop the compressor and charge the specified weight of refrigerant.

- To avoid compressor breakdown. Do not charge the refrigerant more than the specified amount.
- If the total refrigerant cannot be charged while the outdoor unit is at a standstill, it is possible to charge the refrigerant by operating the outdoor unit using the refrigerant charge function (refer to “Setting mode 2” on page 108) and follow "Procedure 3: Charging while the outdoor unit is operating" on page 81.

Procedure 3: Charging while the outdoor unit is operating

See the figure in "How to connect the tank?" on page 77.

1. Completely open the gas side stop valve and liquid side stop valve. Valve A must be left fully closed.
2. Close the front panel and turn on the power to all indoor units and the outdoor unit.
3. Open valve A immediately after starting of the compressor.
4. Charge the additional refrigerant in its liquid state through the service port of the liquid line stop valve.
5. While the unit is at a standstill and under setting mode 2 (refer to Checks before initial start-up, "Setting mode 2" on page 108), set the required function A (additional refrigerant charging operation) to **ON** (ON). Then operation starts. The blinking H2P led indicates test operation and the remote control indicates **TEST** (test operation) and (external control).
6. When the specified amount of refrigerant is charged, push the **BS3 RETURN** button. Then operation stops.
   - The operation automatically stops within 30 minutes.
   - If the refrigerant charge cannot be finished within 30 minutes, repeat step 5.
   - If the operation stops immediately after restart, there is a possibility that the system is overcharged.
     The refrigerant cannot be charged more than this amount.
7. After the refrigerant charge hose is removed, make sure to close valve A.

1.1.5 Check Operation

* During check operation, mount front panel to avoid the misjudging.
* Check operation is mandatory for normal unit operation.
  (When the check operation is not executed, alarm code "U3" will be displayed.)

Set to setting mode 1 (H1P led is off) (refer to "Setting mode 1" on page 107.)

↓

Press and hold the TEST OPERATION button (BS4) on outdoor unit PC board for 5 seconds.

↓

Check on operation

○ The test operation is started automatically.
The following judgements are conducted within 15 minutes(about 30 minutes at the maximum).
- “Check for wrong wiring”
- “Check stop valve for not open”
- “Check of refrigerant charge”
- “Pipe length automatic judgement”

The following indications are conducted while in test operation.
- LED lamp on outdoor unit PC board — H2P flickers (test operation)
- Remote control — Indicates “UNDER CENTRALIZED CONTROL” on upper right.
  Indicates “TEST OPERATION” on lower left.

(V3057)

On completion of test operation, LED on outdoor unit PC board displays the following.
H3P ON: Normal completion
H2P ON: Abnormal completion →Check the indoor unit remote control for abnormal display and correct it.

Malfunction code

In case of an alarm code displayed on remote control:

Malfunction code	Nonconformity during installation	Remedial action
E3	The shutoff valve of an outdoor unit is left closed.	Open the gas-side shutoff valve and the liquid-side shutoff valve.
	Refrigerant overcharge.	Recalculate the required amount of refrigerant from the piping length and correct the refrigerant charge level by recovering any excessive refrigerant with a refrigerant recovery machine.
E4	The shutoff valve of an outdoor unit is left closed.	Open the gas-side shutoff valve and the liquid-side shutoff valve.
	Insufficient refrigerant.	Check if the additional refrigerant charge has been finished correctly.
		Recalculate the required amount of refrigerant from the piping length and add an adequate amount of refrigerant.
F3	Refrigerant overcharge.	Recalculate the required amount of refrigerant from the piping length and correct the refrigerant charge level by recovering any excessive refrigerant with a refrigerant recovery machine.
	The shutoff valve of an outdoor unit is left closed.	Open the gas-side shutoff valve and the liquid-side shutoff valve.
	Insufficient refrigerant.	Check if the additional refrigerant charge has been finished correctly.
		Recalculate the required amount of refrigerant from the piping length and add an adequate amount of refrigerant.
F6	Refrigerant overcharge	Recalculate the required amount of refrigerant from the piping length and correct the refrigerant charge level by recovering any excessive refrigerant with a refrigerant recovery machine.
U1	Power supply cables are connected in the reverse phase instead of the normal phase.	Connect the power supply cables in normal phase. Change any two of the three power supply cables (L1, L2, L3) to correct phase.
U2	Insufficient supply voltage	Check to see if the supply voltage is supplied properly.
U3	If a check operation has not been performed.	Perform a check operation.
U4	No power is supplied to an outdoor unit.	Turn the power on for the outdoor unit.
UA	If no dedicated indoor unit is being used.	Check the indoor unit. If it is not a dedicated unit, replace the indoor unit.
UF	The shutoff valve of an outdoor unit is left closed.	Open the gas-side shutoff valve and the liquid-side shutoff valve.
	If the right indoor unit piping and wiring are not properly connected to the outdoor unit.	Make sure that the right indoor unit piping and wiring are properly connected to the outdoor unit.
UH	If the interunit wiring has not be connected or it has shorted.	Make sure the interunit wiring is correctly attached to terminals (X2M) F1/F2 (TO IN/D UNIT) on the outdoor unit circuit board.

1.1.6 Confirmation on Normal Operation

- Conduct normal unit operation after the check operation has been completed.
  (When outdoor air temperature is 24°CDB or higher, the unit can not be operated with heating mode. See the installation manual attached.)
- Confirm that the indoor/outdoor units can be operated normally.
  (When an abnormal noise due to liquid compression by the compressor can be heard, stop the unit immediately, and turn on the crankcase heater to heat up it sufficiently, then start operation again.)
- Operate indoor unit one by one to check that the corresponding outdoor unit operates.
- Confirm that the indoor unit discharges cold air (or warm air).
- Operate the air direction control button and flow rate control button to check the function of the devices.

1.2 Operation when Power is Turned On

1.2.1 When Turning On Power First Time

The unit cannot be run for up to 12 minutes to automatically set the master power and address (indoor-outdoor address, etc.).

Status

Outdoor unit	Test lamp H2P .... Blinks Can also be set during operation described above.
Indoor unit	If ON button is pushed during operation described above, the “UH” malfunction indicator blinks. (Returns to normal when automatic setting is complete.)

1.2.2 When Turning On Power the Second Time and Subsequent

Tap the RESET(BS5) button on the outdoor unit PC board. Operation becomes possible for about 2 minutes. If you do not push the RESET button, the unit cannot be run for up to 10 minutes to automatically set master power.

Status

Outdoor unit	Test lamp H2P .... Blinks Can also be set during operation described above.
Indoor unit	If ON button is pushed during operation described above, the operation lamp lights but the compressor does not operate. (Returns to normal when automatic setting is complete.)

1.2.3 When an Indoor Unit or Outdoor Unit has been Added, or Indoor or Outdoor Unit PC Board has been Changed

Be sure to push and hold the RESET button for 5 seconds. If not, the addition cannot be recognized. In this case, the unit cannot be run for up to 12 minutes to automatically set the address (indoor-outdoor address, etc.)

Status

Outdoor unit	Test lamp H2P .... ON Can also be set during operation described above.
Indoor unit	If ON button is pushed during operation described above, the “UH” or “U4” malfunction indicator blinks. (Returns to normal when automatic setting is complete.)

2. Outdoor Unit PC Board Layout

RXYSQ4 / 5 / 6PA7Y1B

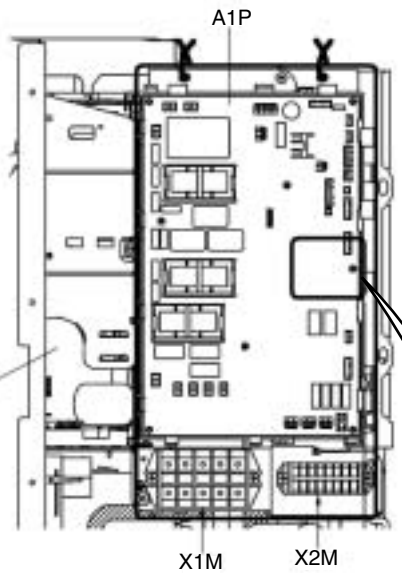

RXYSQ4 / 5 / 6PA7V1B

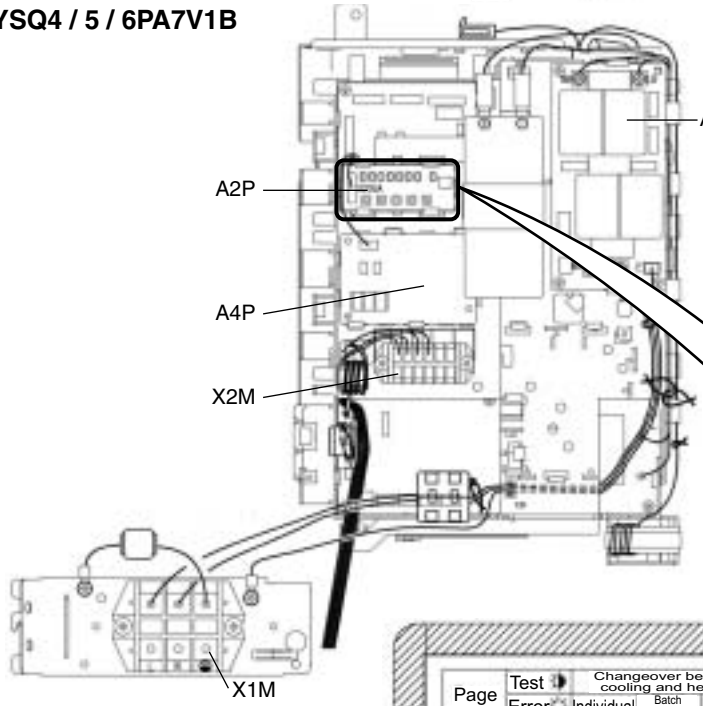

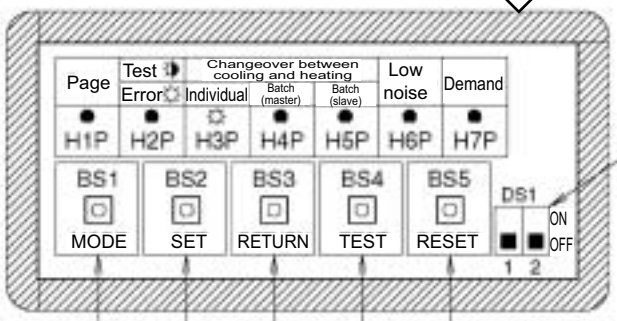

DIP switches (DS1-1 and DS1-2)

Sets the address again when the wiring is changed or an indoor unit is added.

Performs the test run.

Used at field set.

Changes the set mode.

LED indicator status	● : Turn off	☼ : Turn on	◑ : Flicker	✱ : Turn on or off

(The LED indicator status shown at left indicates the status at factory set.)

3. Field Setting

3.1 Field Setting from remote control

Individual function of indoor unit can be changed from the remote control. At the time of installation or after service inspection / repair, make the local setting in accordance with the following description.
Wrong setting may cause malfunction.
(When optional accessory is mounted on the indoor unit, setting for the indoor unit may be required to change. Refer to information in the option handbook.)

3.1.1 Wired remote control

BRC1C62

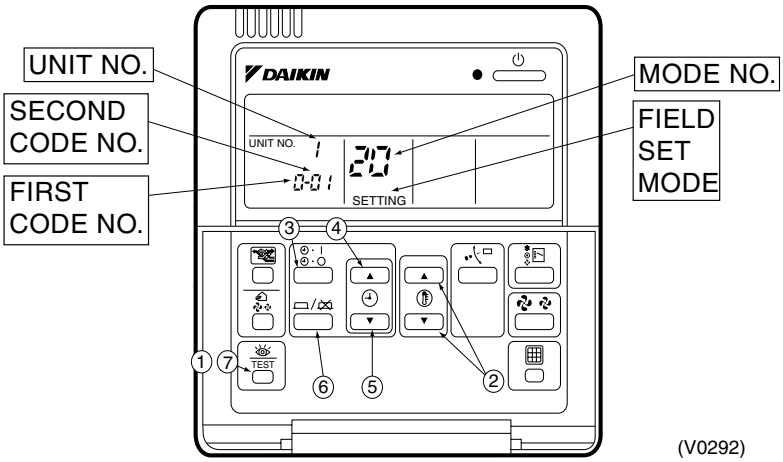

1. When in the normal mode, press the " TEST " button for a minimum of four seconds, and the FIELD SET MODE is entered.
2. Select the desired MODE NO. with the " " button (②).
3. During group control, when setting by each indoor unit (mode No. 20, 22 and 23 have been selected), push the " " button (③) and select the INDOOR UNIT NO to be set. (This operation is unnecessary when setting by group.)
4. Push the " " upper button (④) and select FIRST CODE NO.
5. Push the " " lower button (⑤) and select the SECOND CODE NO.
6. Push the " " button (⑥) once and the present settings are SET.
7. Push the " TEST " button (⑦) to return to the NORMAL MODE.

(Example)
If during group setting and the time to clean air filter is set to FILTER CONTAMINATION, HEAVY, SET MODE NO. to "10" FIRST CODE NO. to "0", and SECOND CODE NO. to "02".

BRC1D528

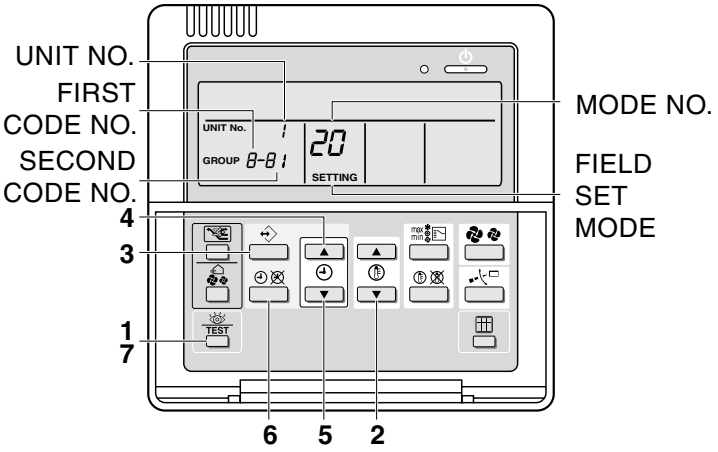

If optional accessories are mounted on the indoor unit, the indoor unit setting may have to be changed. Refer to the instruction manual for each optional accessory.

1. When in the normal mode, press the " TEST " button for a minimum of four seconds, and the FIELD SET MODE is entered.
2. Select the desired MODE NO. with the " " button.
3. During group control, when setting by each indoor unit (mode No. 20, 21, 22 and 23 have been selected), push the " " button and select the INDOOR UNIT NO. to be set. (This operation is unnecessary when setting by group.)
4. Push the " " upper button and select FIRST CODE NO.
5. Push the " " lower button and select the SECOND CODE NO.
6. Push the " " button once and the present settings are SET.
7. Push the " TEST " button to return to the NORMAL MODE.

(Example)
If during group setting and the time to clean the air filter is set to FILTER CONTAMINATION - HEAVY, SET MODE NO. to "10", FIRST CODE NO. to "0", and SECOND CODE NO. to "02".

Notes :

1. Setting is carried out in the group mode, however, if the mode number inside the parentheses is selected, indoor units can also be set individually.
2. The SECOND CODE number is set to "01" when shipped from the factory.
3. Do not make any settings not given in the table.
4. Not displayed if the indoor unit is not equipped with that function.
5. When returning to the normal mode, "88" may be displayed in the LCD in order for the remote control to initialize itself.
6. It is not possible to change field settings on the remote control that is set to "sub".

3.1.2 Infrared remote control - Indoor Unit

BRC7 type
BRC4 type

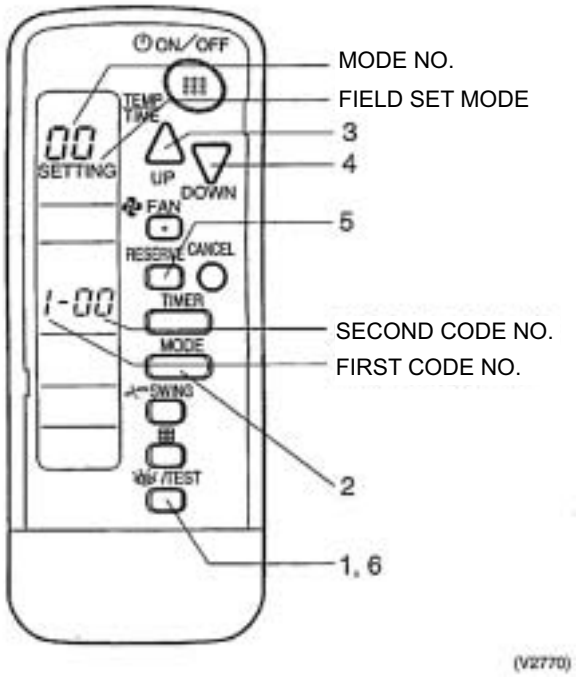

1. When in the normal mode, push the " /TEST " button for 4 seconds or more, and operation then enters the "field set mode."
2. Select the desired "mode No." with the " MODE " button.
3. Pushing the " UP " button, select the first code No.
4. Pushing the " DOWN " button, select the second code No.
5. Push the timer " RESERVE " button and check the settings.
6. Push the " /TEST " button to return to the normal mode.

(Example)
When setting the filter sign time to "Filter Dirtiness-High" in all group unit setting, set the Mode No. to "10", Mode setting No. to "0" and setting position No. to "02".

3.1.3 Simplified remote control

BRC2C51

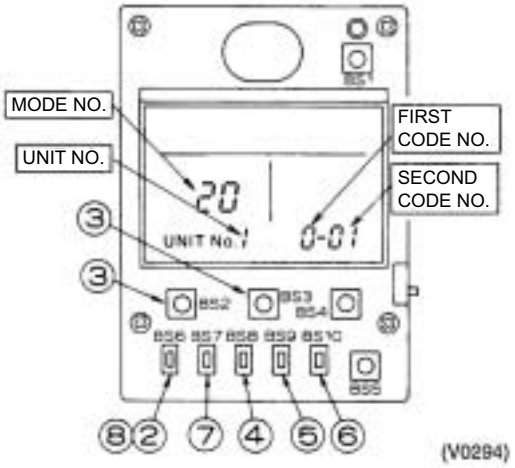

1. Remove the upper part of remote control.
2. When in the normal mode, press the [BS6] BUTTON (②) (field set), and the FIELD SET MODE is entered.
3. Select the desired MODE No. with the [BS2] BUTTON (③) (temperature setting ▲) and the [BS3] BUTTON (③) (temperature setting ▼).
4. During group control, when setting by each indoor unit (mode No. 20, 22, and 23 have been selected), push the [BS8] (④) BUTTON (unit No.) and select the INDOOR UNIT NO. to be set. (This operation is unnecessary when setting by group.)
5. Push the [BS9] BUTTON (⑤) (set A) and select FIRST CODE NO.
6. Push the [BS10] BUTTON (⑥) (set B) and select SECOND CODE NO.
7. Push the [BS7] BUTTON (⑦) (set/cancel) once and the present settings are SET.
8. Push the [BS6] BUTTON (⑧) (field set) to return to the NORMAL MODE.
9. (Example) If during group setting and the time to clean air filter is set to FILTER CONTAMINATION - HEAVY, SET MODE NO. to “10”, FIRST CODE NO. to “0”, and SECOND CODE NO. to “02”.

3.1.4 Setting Contents and Code No. – VRV Indoor unit

	Mode No. Note 2	Setting Switch No.	Setting Contents		Second Code No.(Note 3) 01		02		03		04		Details No.
VRV system indoor unit settings	10 (20)	0	Filter contamination heavy/light (Setting for display time to clean air filter) (Sets display time to clean air filter to half when there is heavy filter contamination.)	Super long life filter	Light	Approx. 10,000 hrs.	Heavy	Approx. 5,000 hrs.	—		—		(1)
				Long life filter		Approx. 2,500 hrs.		Approx. 1,250 hrs.					
				Standard filter		Approx. 200 hrs.		Approx. 100 hrs.					
		1	Long life filter type		Long life filter		Super long life filter		—		—		(2)
		2	Thermostat sensor in remote control		Use		No use		—		—		(3)
		3	Display time to clean air filter calculation (Set when filter sign is not to be displayed.)		Display		No display		—		—		(4)
	11 (21)	7	Airflow adjustment		OFF		Completion of airflow adjustment		Start of airflow adjustment		—		(5)
	12 (22)	0	Optional accessories output selection (field selection of output for adapter for wiring)		Indoor unit turned ON by thermostat		—		Operation output		Malfunction output		(6)
		1	ON/OFF input from outside (Set when ON/OFF is to be controlled from outside.)		Forced OFF		ON/OFF control		External protection device input		—		(7)
		2	Thermostat differential changeover (Set when remote sensor is to be used.)		1°C		0.5°C		—		—		(8)
		3	OFF by thermostat fan speed		LL		Set fan speed		—		—		(9)
		4	Automatic mode differential (automatic temperature differential setting for VRV system heat recovery series cool/heat)		01:0	02:1	03:2	04:3	05:4	06:5	07:6	08:7	(10)
		5	Power failure automatic reset		Not equipped		Equipped		—		—		(11)
		6	Airflow When Cooling Thermostat is OFF		LL air flow		Preset air flow		—		—		(12)
	13 (23)	0	High air outlet velocity (Set when installed in place with ceiling higher than 2.7 m.)		N		H		S		—		(13)
		1	Selection of air flow direction (Set when a blocking pad kit has been installed.)		F (4 directions)		T (3 directions)		W (2 directions)		—		(14)
		3	Air flow direction adjustment (Set at installation of decoration panel.)		Equipped		Not equipped		—		—		(15)
		4	Field set air flow position setting		Draft prevention		Standard		Ceiling Soiling prevention		—		(16)
		5	Setting of the Static Pressure Selection		Standard		High static pressure		—		—		(17)
		6	External Static Pressure Settings		01:30	02:50	03:60	04:70	05:80	06:90	07:100	08:110	(18)
					09:120	10:130	11:140	12:150	13:160	14:180	15:200	*7	
	15 (25)	1	Thermostat OFF excess humidity		Not equipped		Equipped		—		—		(19)
		2	Direct duct connection (when the indoor unit and heat reclaim ventilation unit are connected by duct directly.) *Note 6		Not equipped		Equipped		—		—		(20)
		3	Drain pump humidifier interlock selection		Not equipped		Equipped		—		—		(21)
		5	Field set selection for individual ventilation setting by remote control		Not equipped		Equipped		—		—		(22)

Notes :

1. Settings are made simultaneously for the entire group, however, if you select the mode No. inside parentheses, you can also set by each individual unit. Setting changes however cannot be checked except in the individual mode for those in parentheses.
2. The mode numbers inside parentheses cannot be used by wireless remote controls, so they cannot be set individually. Setting changes also cannot be checked.
3. Marked ▭ are factory set.
4. Do not make settings other than those described above. Nothing is displayed for functions the indoor unit is not equipped with.
5. “88” may be displayed to indicate the remote control is resetting when returning to the normal mode.
6. If the setting mode to “Equipped”, heat reclaim ventilation fan conducts the fan residual operation by linking to indoor unit.
7. • The FXMQ50·63·80·100·125PVE cannot be set to 30Pa.
   • The FXMQ40PVE cannot be set to 180 or 200Pa.

3.1.5 Applicable range of Field setting

	Ceiling mounted cassette type			Slim Ceiling mounted duct type	Ceiling mounted built-in type	Ceiling Mounted duct type (Middle and high static pressure)	Ceiling suspended type	Wall mounted type	Floor standing type	Concealed Floor standing type	New Ceiling suspended cassette type	Details No.
	Round flow	Double flow	Corner type									
	FXFQ	FXCQ	FXKQ	FXDQ	FXSQ	FXMQ-P	FXHQ	FXAQ	FXLQ	FXNQ	FXUQ	
Filter sign	○	○	○	○	○	○	○	○	○	○	○	(1)
Ultra long life filter sign	○	○	—	—	—	—	—	—	—	—	—	(2)
remote control thermostat sensor	○	○	○	○	○	○	○	○	○	○	○	(3)
Set fan speed when thermostat OFF	○	○	○	○	○	○	○	○	○	○	○	(9) (12)
Air flow auto adjustment	—	—	—	—	—	○	—	—	—	—	—	(5)
Air flow adjustment Ceiling height	○	—	—	—	—	—	○	—	—	—	○	(13)
Air flow direction	○	—	—	—	—	—	—	—	—	—	○	(14)
Air flow direction adjustment (Down flow operation)	—	—	○	—	—	—	—	—	—	—	—	(15)
Air flow direction adjustment range	○	○	○	—	—	—	—	—	—	—	—	(16)
Field set fan speed selection	○	—	—	○*1	—	○*1	○	—	—	—	—	(17) (18)

*1 Static pressure selection

3.1.6 Detailed Explanation of Setting Modes

(1) Filter Sign Setting

If switching the filter sign ON time, set as given in the table below.

Set Time

Filter Specs. / Setting	Standard	Long Life	Ultra Long Life Filter
Contamination Light	200 hrs.	2,500 hrs.	10,000 hrs.
Contamination Heavy	100 hrs.	1,250 hrs.	5,000 hrs.

(2) Ultra-Long-Life Filter Sign Setting

When a Ultra-long-life filter is installed, the filter sign timer setting must be changed.

Setting Table

Mode No.	Setting Switch No.	Setting Position No.	Setting
10 (20)	1	01	Long-Life Filter
		02	Ultra-Long-Life Filter (1)
		03	—

(3) Selection of Thermistor

Select the thermistor to control room temperature.

Mode No.	First Code No.	Second Code No.	Thermistor that controls room temperature
10 (20)	2	01	Indoor air thermistor for remote control and suction air thermistor for indoor unit
		02	Suction air thermistor for indoor unit
		03	Thermistor for remote control

The factory setting for the Second Code No. is "01" and room temperature is controlled by the indoor unit suction air thermistor and remote control thermistor.
When the Second Code No. is set to "02", room temperature is controlled by the suction air thermistor.
When the Second Code No. is set to "03", room temperature is controlled by the remote control thermistor.

(4) "Filter Cleaning" Displayed or Not Displayed

Whether or not to display "Filter Cleaning" after operation of certain duration can be selected.

Mode No.	First Code No.	Second Code No.	"Filter Cleaning" display
10 (20)	3	01	Display
		02	No display

(5) Airflow Adjustment (AUTO)

External Static Pressure Settings

Make settings in either method (a) or method (b) as explained below.

(a) Use the airflow auto adjustment function to make settings.
Airflow auto adjustment: The volume of blow-off air is automatically adjusted to the rated quantity.

(b) Select External Static Pressure with remote control Check that 01 (OFF) is set for the “SECOND CODE NO.” in “MODE NO. 21” for airflow adjustment on an indoor unit basis in Table 4. The “SECOND CODE NO.” is set to 01 (OFF) at factory set. Change the “SECOND CODE NO.” as shown in Table according to the external static pressure of the duct to be connected.

Mode No.	First Code No.	Second Code No.	Airflow adjustment
11 (21)	7	01	OFF
		02	Completion of airflow adjustment
		03	Start of airflow adjustment

(6) Optional Output Switching

Using this setting, "operation output signal" and "abnormal output signal" can be provided. Output signal is output between terminals K1 and K2 of "customized wiring adapter," an optional accessory.

Mode No.	First Code No.	Second Code No.	Remarks
12 (22)	0	01	Indoor unit thermostat ON/OFF signal is provided.
		03	Output linked with "Start/Stop" of remote control is provided.
		04	In case of "Malfunction Display" appears on the remote control, output is provided.

(7) External ON/OFF input

This input is used for "ON / OFF operation" and "Protection device input" from the outside. The input is performed from the T1-T1 terminal of the operation terminal block (X1A) in the electric component box.

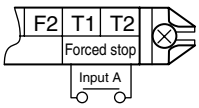

Setting Table

Mode No.	Setting Switch No.	Setting Position No.	Operation by input of the signal A
12 (22)	1	01	ON: Forced stop (prohibition of using the remote control) OFF: Permission of using the remote control
		02	OFF → ON: Permission of operation ON → OFF: Stop
		03	ON: Operation OFF: The system stops, then the applicable unit indicates "A0". The other indoor units indicate "U9".

(8) Thermostat Switching

Differential value during thermostat ON/OFF control can be changed.

Mode No.	First Code No.	Second Code No.	Differential value
12(22)	2	01	1ºC
		02	0.5ºC

(9) Air Flow Setting When Heating Thermostat is OFF

This setting is used to set air flow when heating thermostat is OFF.

∗ When thermostat OFF air flow volume up mode is used, careful consideration is required before deciding installation location. During heating operation, this setting takes precedence over "(7) Fan Stop When Thermostat is OFF."

Mode No.	First Code No.	Second Code No.	Contents
12 (22)	3	01	LL air flow
		02	Preset air flow

(10) Setting of operation mode to "AUTO"

This setting makes it possible to change differential values for mode selection while in automatic operation mode.

Mode No.	Setting switch No.	Setting position No.							
		01	02	03	04	05	06	07	08
12 (22)	4	0°C	1°C	2°C	3°C	4°C	5°C	6°C	7°C

The automatic operation mode setting is made by the use of the "Operation Mode Selector" button.

(11) Auto Restart after Power Failure Reset

For the air conditioners with no setting for the function (same as factory setting), the units will be left in the stop condition when the power supply is reset automatically after power failure reset or the main power supply is turned on again after once turned off. However, for the air conditioners with the setting, the units may start automatically after power failure reset or the main power supply turned on again (return to the same operation condition as that of before power failure).

For the above reasons, when the unit is set enabling to utilize “Auto restart function after power failure reset”, utmost care should be paid for the occurrence of the following situation.

Caution

1. **The air conditioner starts operation suddenly after power failure reset or the main power supply turned on again. Consequently, the user might be surprised (with question for the reason why).**
2. **In the service work, for example, turning off the main power switch during the unit is in operation, and turning on the switch again after the work is completed start the unit operation (the fan rotates).**

(12) Air Flow When Cooling Thermostat is OFF

This is used to set air flow to "LL air flow" when cooling thermostat is OFF.

Mode No.	First Code No.	Second Code No.	Contents
12 (22)	6	01	LL air flow
		02	Preset air flow

(13) Setting of Normal Air Flow

Make the following setting according to the ceiling height. The setting position No. is set to “01” at the factory.

■ In the Case of FXAQ

Mode No.	Setting Switch No.	Setting Position No.	Setting
13(23)	0	01	Wall-mounted type: Standard
		02	Wall-mounted type: Slight increase
		03	Wall-mounted type: Normal increase

■ In the Case of FXHQ

Mode No.	First code No.	Second code No.	Ceiling height (m)
13(23)	0	01	2.7 or less
		02	2.7-3.5

■ In the Case of FXFQ20~80 (All round outlet)

Mode No.	First code No.	Second code No.	Setting	Ceiling height (m)
13 (23)	0	01	Standard • All round outlet	≤2.7
		02	High Ceiling (1)	2.7-3
		03	Higher Ceiling (2)	3-3.5

■ In the Case of FXFQ100~125 (All round outlet)

Mode No.	First code No.	Second code No.	Setting	Ceiling height (m)
13 (23)	0	01	Standard • All round outlet	≤3.2
		02	High Ceiling (1)	3.2-3.6
		03	Higher Ceiling (2)	3.6-4.2

■ In the Case of FXFQ20~80 (*2 4-Way, 3-Way, 2-Way Outlets)

Mode No.	First code No.	Second code No.	Setting	Ceiling height		
				4-way Outlets	3-way Outlets	2-way Outlets
13 (23)	0	01	Standard (N)	Lower than 3.1 m	Lower than 3.0 m	Lower than 3.5 m
		02	High Ceiling (H)	Lower than 3.4 m	Lower than 3.3 m	Lower than 3.8 m
		03	Higher Ceiling (S)	Lower than 4.0 m	Lower than 3.5 m	—

■ In the Case of FXFQ100~125 (*2 4-Way, 3-Way, 2-Way Outlets)

Mode No.	First code No.	Second code No.	Setting	Ceiling height		
				4-way Outlets	3-way Outlets	2-way Outlets
13 (23)	0	01	Standard (N)	Lower than 3.4 m	Lower than 3.6 m	Lower than 4.2 m
		02	High Ceiling (H)	Lower than 3.9 m	Lower than 4.0 m	Lower than 4.2 m
		03	Higher Ceiling (S)	Lower than 4.5 m	Lower than 4.2 m	—

*1 “Mode No.” setting is done in a batch for the group. To make or confirm settings for an individual unit, set the internal mode number in parentheses.

*2 The figure of the ceiling height is for the all round outlet. For the settings for four-direction (part of corner closed off), three-direction and two-direction outlets, see the installation manual and technical guide supplied with the separately sold closure material kit.

■ **In the Case of FXUQ71~125**

Mode No.	First code No.	Second code No.	Setting	Ceiling height		
				4-way Outlets	3-way Outlets	2-way Outlets
13 (23)	0	01	Standard (N)	Lower than 2.7 m	Lower than 3.0 m	Lower than 3.5 m
		02	High Ceiling (H)	Lower than 3.0 m	Lower than 3.5 m	Lower than 3.8 m
		03	Higher Ceiling (S)	Lower than 3.5 m	Lower than 3.8 m	—

(14) Air Flow Direction Setting

Set the air flow direction of indoor units as given in the table below. (Set when optional air outlet blocking pad has been installed.) The second code No. is factory set to “01.”

Setting Table

Mode No.	First Code No.	Second Code No.	Setting
13 (23)	1	01	F : 4-direction air flow
		02	T : 3-direction air flow
		03	W : 2-direction air flow

(15) Operation of Downward Flow Flap: Yes/No

Only the model FXKQ has the function.
When only the front-flow is used, sets yes/no of the swing flap operation of down-flow.

Setting Table

Mode No.	First Code No.	Second Code No.	Setting
13 (23)	3	01	Down-flow operation: Yes
		02	Down-flow operation: No

(16) Setting of Air Flow Direction Adjustment Range

Make the following air flow direction setting according to the respective purpose.

(S2537)

Setting Table

Mode No.	First Code No.	Second Code No.	Setting
13 (23)	4	01	Upward (Draft prevention)
		02	Standard
		03	Downward (Ceiling soiling prevention)

∗ Some indoor unit models are not equipped with draft prevention (upward) function.

(17) Setting of the Static Pressure Selection

■ **In the Case of FXDQ20~32PB, FXDQ40~63NB**

Model No.	First Code No.	Second Code No.	External static pressure
13 (23)	5	01	Standard (10Pa)
		02	High static pressure (30Pa)

(18) External Static Pressure Settings (for FXMQ-P model)

MODE NO.	FIRST CODE NO.	SECOND CODE NO.	External Static Pressure
13 (23)	06	01	30Pa (*1)
		02	50Pa
		03	60Pa
		04	70Pa
		05	80Pa
		06	90Pa
		07	100Pa
		08	110Pa
		09	120Pa
		10	130Pa
		11	140Pa
		12	150Pa
		13	160Pa
		14	180Pa (*2)
		15	200Pa (*2)

The “SECOND CODE NO.” is set to 07 (an external static pressure of 100 Pa) at factory set.
*1 The FXMQ50 · 63 · 80 · 100 · 125PVE cannot be set to 30 Pa.
*2 The FXMQ40PVE cannot be set to 180 or 200 Pa.

(19) Humidification When Heating Thermostat is OFF

Setting to "Humidification Setting" turns ON the humidifier if suction temperature is 20ºC or above and turns OFF the humidifier if suction temperature is 18ºC or below when the heating thermostat is OFF.

Mode No.	First Code No.	Second Code No.	Setting
15 (25)	1	01	—
		02	Setting of humidifier

(20) Setting of Direct Duct Connection

This is used when "fresh air intake kit equipped with fan" is connected. The indoor fan carries out residual operation for one minute after the thermostat is stopped. (For the purpose of preventing dust on the air filter from falling off.)

Mode No.	First Code No.	Second Code No.	Contents
15 (25)	2	01	Without direct duct connection
		02	With direct duct connection equipped with fan

(21) Interlocked Operation between Humidifier and Drain Pump

This is used to interlock the humidifier with the drain pump. When water is drained out of the unit, this setting is unnecessary.

Mode No.	First Code No.	Second Code No.	Contents
15 (25)	3	01	Individual operation of humidifier
		02	Interlocked operation between humidifier and drain pump

(22) Individual Setting of Ventilation

This is set to perform individual operation of heat reclaim ventilation using the remote control/ central unit when heat reclaim ventilation is built in.
(Switch only when heat reclaim ventilation is built in.)

Mode No.	First Code No.	Second Code No.	Contents
15 (25)	5	01	—
		02	Individual operation of ventilation

3.1.7 Centralized Control Group No. Setting

BRC1C Type

In order to conduct the central remote control using the central remote control and the unified ON/OFF controller, Group No. settings should be made by group using the operating remote control.

Make Group No. settings for central remote control using the operating remote control.

1. Turn ON the power of the indoor unit and unified ON/OFF controller. (Unless the power is ON, no setting can be made.)
   Check that the installation and electrical wiring are correct before turning the power supply ON.
   When the power supply is turned ON, all LCD appear once and the unit may not accept the operation for about one minute with the display of " HOST " flashing (an interval of ON, ON, and OFF)
2. While in normal mode, press and hold the " TEST " switch for a period of four seconds or more to set the system to "Field Setting Mode".
3. Select the MODE No. "00" with the " " button.
4. Use the " " button to select the group No. for each group.
   (Group numbers increase in the order of 1-00, 1-01, ... 1-15, 2-00, ... 4-15.)
5. Press " " to set the selected group No.
6. Press " TEST " to return to the NORMAL MODE.

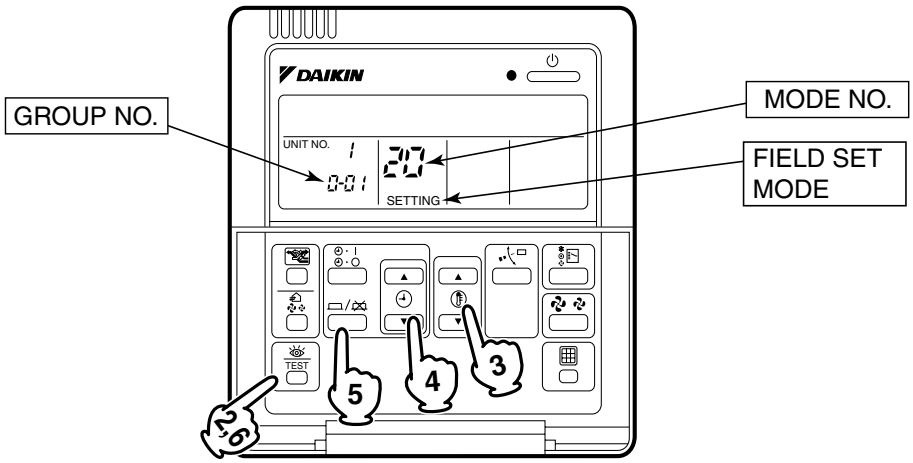

Note:

- For infrared remote control, see the following.
- For setting group No. of HRV and wiring adapter for other air conditioners, etc., refer to the instruction manual attached.

NOTICE

Enter the group No. and installation place of the indoor unit into the attached installation table. Be sure to keep the installation table with the operation manual for maintenance.

BRC7 Type
BRC4 Type

■ Group No. setting by infrared remote control for centralized control

1. When in the normal mode, push " /TEST " button for 4 seconds or more, and operation then enters the "field set mode."
2. Set mode No. "00" with " MODE " button.
3. Set the group No. for each group with " UP " " DOWN " button (advance/backward).
4. Enter the selected group numbers by pushing " RESERVE " button.
5. Push " /TEST " button and return to the normal mode.

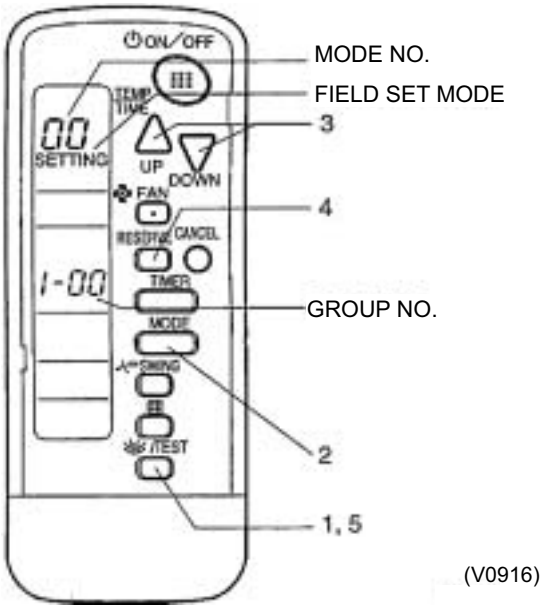

(V0916)

Group No. Setting Example

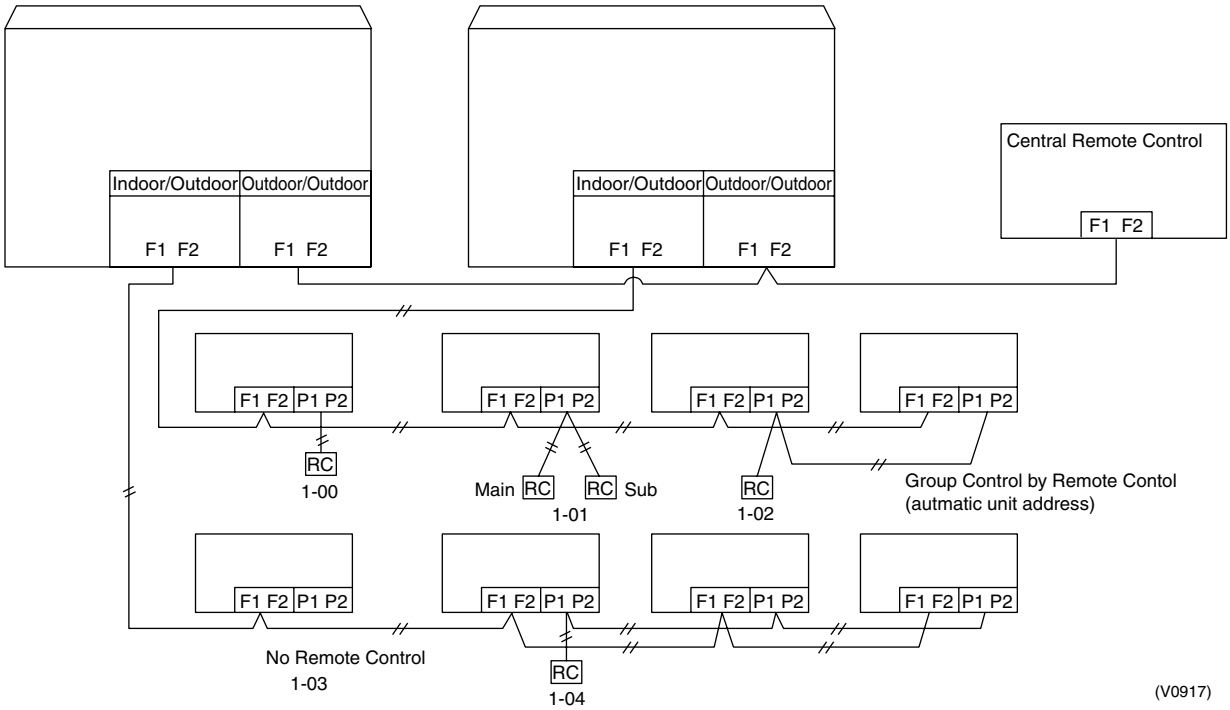

Caution When turning the power supply on, the unit may often not accept any operation while "88" is displaying after all indications were displayed once for about 1 minute on the liquid crystal display. This is not an operative fault.

3.1.8 Setting of Operation Control Mode from remote control (Local Setting)

The operation control mode is compatible with a variety of controls and operations by limiting the functions of the operation remote control. Furthermore, operations such as remote control ON/OFF can be limited in accordance with the combination conditions. (Refer to information in the next page.)
Central remote control is normally available for operations. (Except when centralized monitor is connected)

3.1.9 Contents of Control Modes

Twenty modes consisting of combinations of the following five operation modes with temperature and operation mode setting by remote control can be set and displayed by operation modes 0 through 19.

- ON/OFF control impossible by remote control
  Used when you want to turn on/off by central remote control only.
  (Cannot be turned on/off by remote control.)
- OFF control only possible by remote control
  Used when you want to turn on by central remote control only, and off by remote control only.
- Centralized
  Used when you want to turn on by central remote control only, and turn on/off freely by remote control during set time.
- Individual
  Used when you want to turn on/off by both central remote control and remote control.
- Timer operation possible by remote control
  Used when you want to turn on/off by remote control during set time and you do not want to start operation by central remote control when time of system start is programmed.

How to Select Operation Mode

Whether operation by remote control will be possible or not for turning on/off, controlling temperature or setting operation mode is selected and decided by the operation mode given on the right edge of the table below.

Example

ON by remote control (Unified ON by central remote control)	OFF by remote control (Unified OFF by central remote control)	OFF by remote control	Temperature control by remote control	Operation mode setting by remote control	⇨ Control mode is "1."
↓ Rejection	↓ Rejection	↓ Rejection	↓ Acceptance	↓ Acceptance	

(VL069)

Control mode	Control by remote control					Control mode
	Operation		OFF	Temperature control	Operation mode setting	
	Unified operation, individual operation by central remote control, or operation controlled by timer	Unified OFF, individual stop by central remote control, or timer stop				
ON/OFF control impossible by remote control	Rejection (Example)	Rejection (Example)	Rejection (Example)	Rejection	Acceptance	0
					Rejection	10
				Acceptance (Example)	Acceptance (Example)	1(Example)
					Rejection	11
OFF control only possible by remote control			Acceptance	Rejection	Acceptance	2
					Rejection	12
				Acceptance	Acceptance	3
					Rejection	13
Centralized	Acceptance			Rejection	Acceptance	4
					Rejection	14
				Acceptance	Acceptance	5
					Rejection	15
Individual		Acceptance		Rejection	Acceptance	6
					Rejection	16
				Acceptance	Acceptance	7 ∗1
					Rejection	17
Timer operation possible by remote control	Acceptance (During timer at ON position only)	Acceptance (During timer at ON position only)		Rejection	Acceptance	8
					Rejection	18
				Acceptance	Acceptance	9
					Rejection	19

Do not select “timer operation possible by remote control” if not using a remote control. Operation by timer is impossible in this case.

∗1. Factory setting

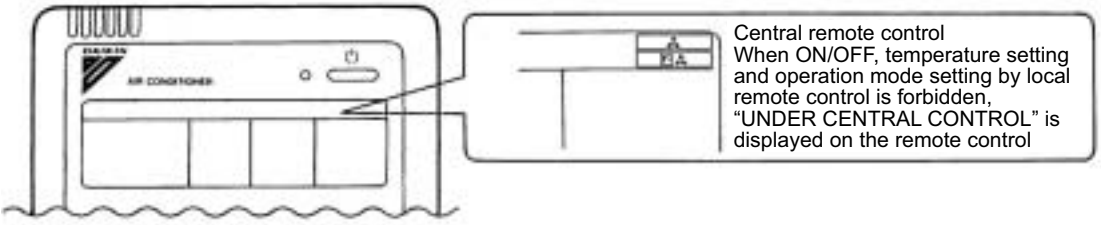

3.2 Field Setting from Outdoor Unit

3.2.1 Setting by Dip Switches

The following field settings are made by dip switches on PC board.

Dipswitch		Setting item	Description
No.	Setting		
DS1-1	ON	Cool / Heat change over setting	Used to set cool / heat change over setting by remote control equipped with outdoor unit. (Note 1)
	OFF (Factory set)		
DS1-2	ON	Not used	Do not change the factory settings.
	OFF (Factory set)		

Cool/heat selector connection procedure

- Set the remote control only when changing over the operation mode between cooling and heating using the remote control installed in the outdoor.

① Connect the cool/heat selector (optional accessory) to the terminals (A, B and C) on the outdoor X2M Terminal board (A, B and C).

② Set the cool/heat selector switch DS1-1 from “OFF” (which is selected at the factory before shipment) to “ON”.

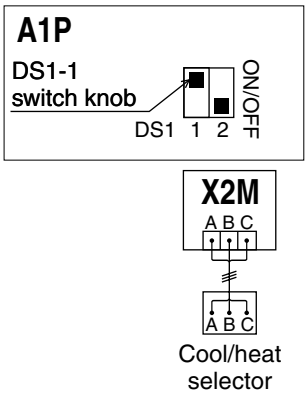

Caution

Capacity Setting after changing the main PC Board(A1P) to spare parts PC Board

When you change the main PC Board(A1P) to spare parts PC Board, please carry out the following setting.

Please Attach the Capacity Setting Adapter corresponding to Capacity Class (ex. 112, 140, 160) in connector X51A. (See Below)

Capacity Setting Adapter

	Capacity Class	Note
①	4 (112)	CAPACITY SETTING ADAPTER (for 100/J112)
②	5 (140)	CAPACITY SETTING ADAPTER (for 125/J140)
③	6 (160)	CAPACITY SETTING ADAPTER (for 140/J160)

Position of Attaching the Capacity Setting Adapter

RXYSQ4 / 5 / 6PA7Y1B

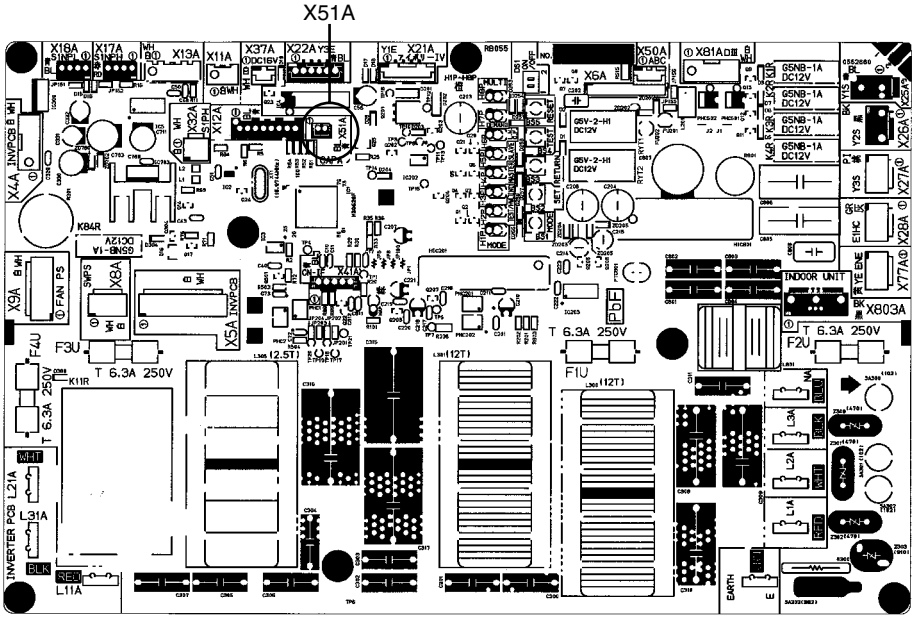

RXYSQ4 / 5 / 6PA7V1B

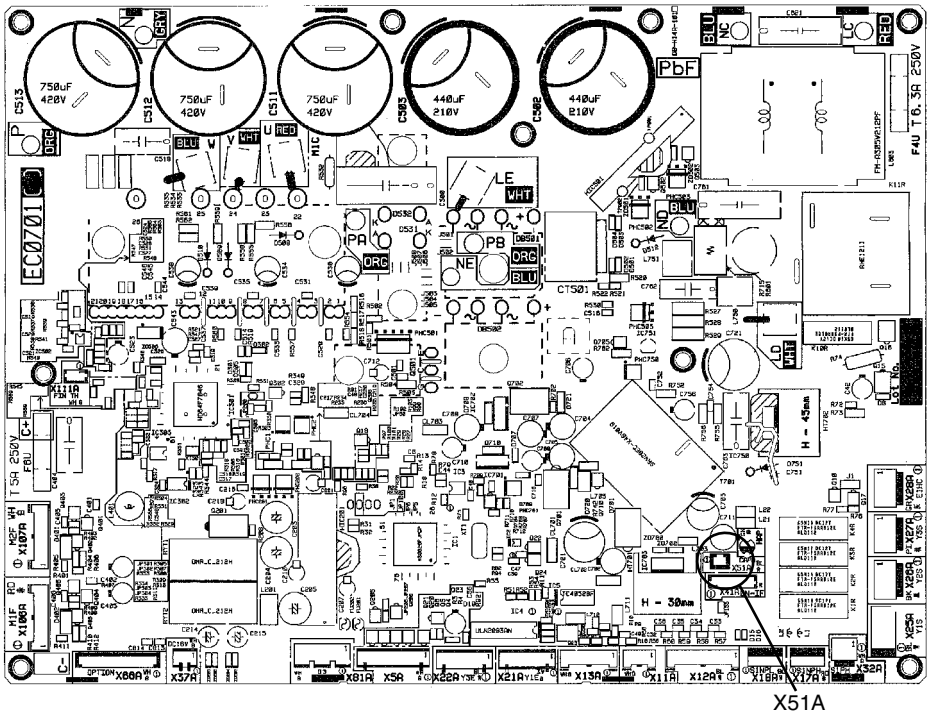

■ Setting by pushbutton switches

The following settings are made by pushbutton switches on PC board.

	H1P	H2P	H3P	H4P	H5P	H6P	H7P
LED indication	●	●	○	●	●	●	●

(Factory setting)

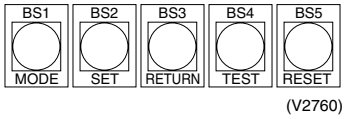

There are the following three setting modes.

① **Setting mode 1 (H1P off)**

Initial status (when normal) : Also indicates during “abnormal”.

② **Setting mode 2 (H1P on)**

Used to modify the operating status and to set program addresses, etc. Usually used in servicing the system.

③ **Monitor mode (H1P blinks)**

Used to check the program made in Setting mode 2.

■ Mode changing procedure

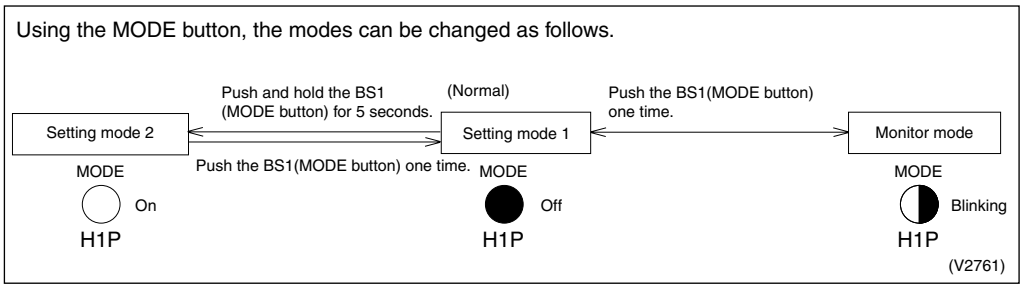

■ Mode changing procedure

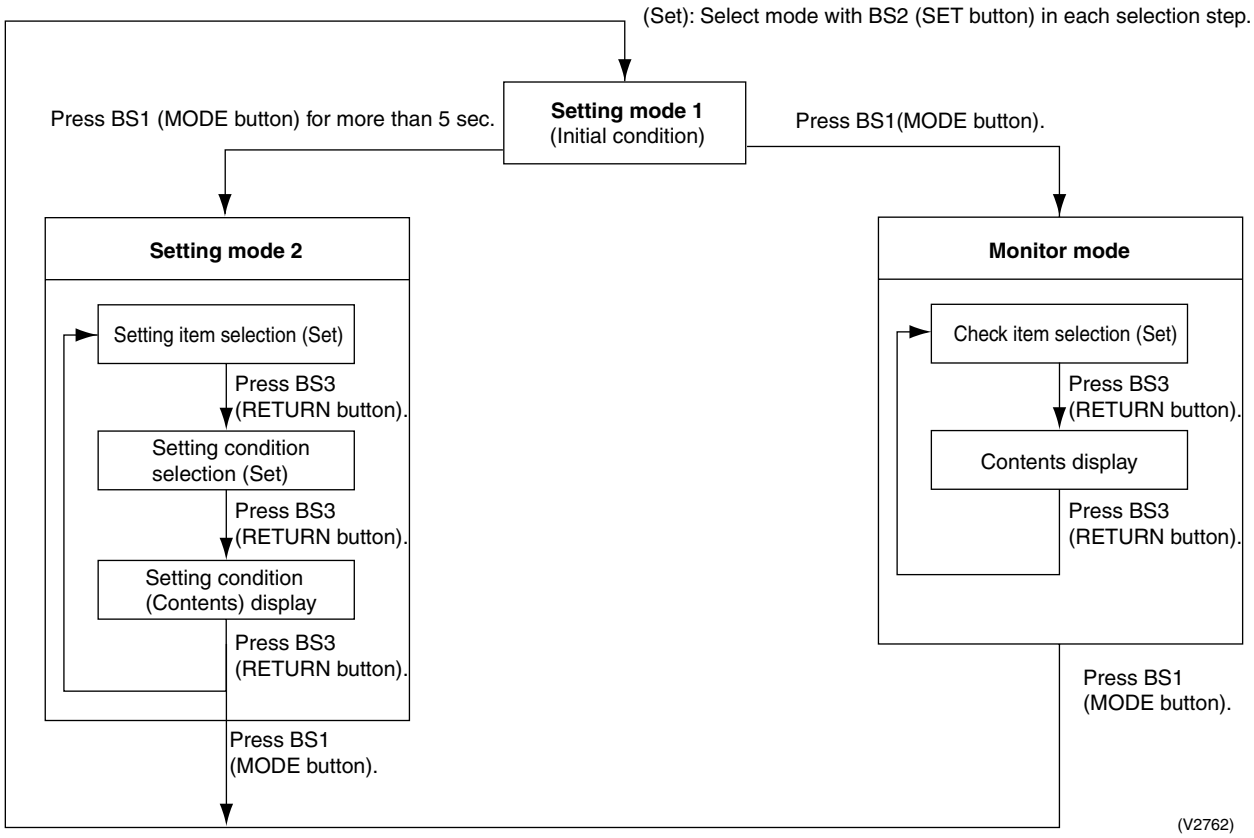

a. “Setting mode 1”

This mode is used to set and check the following items.

1. Set items ····· In order to make COOL/HEAT selection in a batch of outdoor unit group, change the setting.
   - COOL/HEAT selection (IND) ····· Used to select COOL or HEAT by individual outdoor unit (factory set).
   - COOL/HEAT selection (MASTER) ····· Used to select COOL or HEAT by outdoor unit group with the master unit.
   - COOL/HEAT selection (SLAVE) ····· Used to select COOL or HEAT by outdoor unit group with the slave unit.
2. Check items ····· The following items can be checked.
   (1) Current operating conditions (Normal / Abnormal / In check operation)
   (2) Setting conditions of COOL/HEAT selection (Individual / Batch master / Batch slave)
   (3) Low noise operating conditions (In normal operation / In low noise operation)
   (4) Demand operating conditions (In normal operation / In demand operation)

Procedure for changing COOL/HEAT selection setting

“Normally, “Setting mode 1” is set. In case of other status, push MODE (BS1) button one time and set to “Setting mode 1”.

Push the SET (BS2) button to set the blinking of LED to any of conditions shown on the right.

○ ON
● OFF
◑ Blink

Setting (displaying) item	MODE H1P	TEST H2P	COOL/HEAT select			Low noise H6P	Demand H7P
			IND H3P	MASTER H4P	SLAVE H5P		
For selection by individual outdoor unit (factory set)	●	●	◑	●	●	●	●
For selection in a batch of outdoor unit group with master unit	●	●	●	◑	●	●	●
For selection in a batch of outdoor unit group with slave unit	●	●	●	●	◑	●	●

Push the RETURN (BS3) button to determine the setting.

Pushing the RETURN (BS3) button will return the system to the initial condition of "Setting mode 1".

Procedure for checking check items

The system is normally set to "Setting mode 1". Should the system be set to any mode other than that, push the MODE (BS1) button to set the system to "Setting mode 1".

Check the system for each condition through LED displays. (Refer to information in table on the right.)

Pushing the RETURN (BS3) button will bring the system to the initial state of "Setting mode 1".

MODE H1P	TEST H2P	COOL/HEAT select			Low noise H6P	Demand H7P
		IND H3P	MASTER H4P	SLAVE H5P		
●	●	○	●	●	●	●

Current operating conditions
- ● Normal ○ Abnormal
- ◑ In preparation or in check operation

Setting of COOL/HEAT selection
- ○ ● ● By individual outdoor unit
- ● ○ ● In a batch of outdoor unit group with master unit
- ● ● ○ In a batch of outdoor unit group with slave unit

Low noise operating conditions
- ● In normal operation
- ○ In low noise operation

Demand operating conditions
- ● In normal operation
- ○ In demand operation

(V2763)

b. “Setting mode 2”

Push and hold the MODE (BS1) button for 5 seconds and set to “Setting mode 2”.

<Selection of setting items>

Push the SET (BS2) button and set the LED display to a setting item shown in the table on the right.
↓
Push the RETURN (BS3) button and decide the item. (The present setting condition is blinked.)

<Selection of setting conditions>

Push the SET (BS2) button and set to the setting condition you want.
↓
Push the RETURN (BS3) button and decide the condition.

Push the RETURN (BS3) button and set to the initial status of “Setting mode 2”.

∗ If you become unsure of how to proceed, push the MODE (BS1) button and return to setting mode 1.

(V2764)

No.	Setting item	Description
1	Cool/heat unified address	Sets address for cool/heat unified operation.
2	Low noise/demand address	Address for low noise/demand operation
3	Test operation settings	Used to conduct test operation without making changes to the PCB and replacing the refrigerant, after the completion of maintenance.
5	Indoor unit forced fan H	Allows forced operation of indoor unit fan while unit is stopped. (H tap)
6	Indoor unit forced operation	Allows forced operation of indoor unit.
8	Te setting	Target evaporation temperature for cooling
9	Tc setting	Target condensation temperature for heating
10	Defrost changeover setting	Changes the temperature condition for defrost and sets to quick defrost or slow defrost.
12	External low noise setting / Demand setting	Reception of external low noise or demand signal
13	AIRNET address	Set address for AIRNET.
16	Setting of hot water	Make this setting to conduct heating operation with hot water heater.
20	Additional refrigerant charge operation setting	Carries out additional refrigerant charge operation.
21	Refrigerant recovery / vacuuming mode setting	Sets to refrigerant recovery or vacuuming mode.
22	Night-time low noise setting	Sets automatic nighttime low noise operation in a simple way. The operating time is based on “Starting set” and “Ending set”.
25	Setting of external low noise level	Sets low noise level when the low noise signal is input from outside.
26	Night-time low noise operation start setting	Sets starting time of nighttime low noise operation. (Night-time low noise setting is also required.)
27	Night-time low noise operation end setting	Sets ending time of nighttime low noise operation. (Night-time low noise setting is also required.)
28	Power transistor check mode ∗Check after disconnection of compressor wires	Used for trouble diagnosis of DC compressor. Since the waveform of inverter is output without wiring to the compressor, it is convenient to probe whether the trouble comes from the compressor or PC board.
29	Capacity precedence setting	If the capacity control is required, the low noise control is automatically released by this setting during carrying out low noise operation and nighttime low noise operation.
30	Demand setting 1	Changes target value of power consumption when demand control 1 is input.
32	Normal demand setting	Normally enables demand control 1 without external input. (Effective to prevent a problem that circuit breaker of small capacity is shut down due to large load.)

The numbers in the "No." column represent the number of times to press the SET (BS2) button.

No.	Setting item display								Setting condition display
	Setting item	MODE H1P	TEST H2P	C/H selection			Low noise H6P	Demand H7P	✻ Factory set
				IND H3P	Master H4P	Slave H5P			
1	Cool / Heat Unified address	○	●	●	●	●	●	○	Address Binary number (6 digits) 0 ○●●●●●● ✻ 1 ○●●●●●○ ~ 31 ○●○○○○○
2	Low noise/demand address	○	●	●	●	●	○	●	Address Binary number (6 digits) 0 ○●●●●●● ✻ 1 ○●●●●●○ ~ 31 ○●○○○○○
3	Test operation	○	●	●	●	●	○	○	Test operation : OFF ○●●●●●○ Test operation : ON ○●●●●○● ✻
5	Indoor forced fan H	○	●	●	●	○	●	○	Normal operation ○●●●●●○ ✻ Indoor forced fan H ○●●●●○●
6	Indoor forced operation	○	●	●	●	○	○	●	Normal operation ○●●●●●○ ✻ Indoor forced operation ○●●●●○●
8	Te setting	○	●	●	○	●	●	●	High ○●●●○●● Normal (factory setting) ○●●●●○● ✻ Low ○●●●●●○
9	Tc setting	○	●	●	○	●	●	○	High ○●●●○●● Normal (factory setting) ○●●●●○● ✻ Low ○●●●●●○
10	Defrost changeover setting	○	●	●	○	●	○	●	Quick defrost ○●●●○●● Normal (factory setting) ○●●●●○● ✻ Slow defrost ○●●●●●○
12	External low noise/ demand setting	○	●	●	○	○	●	●	External low noise/demand: NO ○●●●●●○ ✻ External low noise/demand: YES ○●●●●○●
13	Airnet address	○	●	●	○	○	●	○	Address Binary number (6 digits) 0 ○●●●●●● ✻ 1 ○●●●●●○ ~ 63 ○○○○○○○
16	Setting of hot water heater	○	●	○	●	●	●	●	OFF ○●●●●●○ ✻ ON ○●●●●○●
20	Additional refrigerant charging operation setting	○	●	○	●	○	●	●	Refrigerant charging: OFF ○●●●●●○ ✻ Refrigerant charging: ON ○●●●●○●
21	Refrigerant recovery / vacuuming mode setting	○	●	○	●	○	●	○	Refrigerant recovery / vacuuming: OFF ○●●●●●○ ✻ Refrigerant recovery / vacuuming: ON ○●●●●○●
22	Night-time low noise setting	○	●	○	●	○	○	●	OFF ○●●●●●● ✻ Level 1 (outdoor fan with 6 step or lower) ○●●●●●○ Level 2 (outdoor fan with 5 step or lower) ○●●●●○● Level 3 (outdoor fan with 4 step or lower) ○●●●●○○

The numbers in the "No." column represent the number of times to press the SET (BS2) button.

No.	Setting item display								Setting condition display							
	Setting item	MODE H1P	TEST H2P	C/H selection			Low noise H6P	Demand H7P								✻ Factory set
				IND H3P	Master H4P	Slave H5P										
25	Low noise setting	○	●	○	○	●	●	○	Level 1 (outdoor fan with 6 step or lower)	○	●	●	●	●	●	○	
									Level 2 (outdoor fan with 5 step or lower)	○	●	●	●	●	○	●	✻
									Level 3 (outdoor fan with 4 step or lower)	○	●	●	●	○	●	●	
26	Night-time low noise operation start setting	○	●	○	○	●	○	●	About 20:00	○	●	●	●	●	●	○	
									About 22:00 (factory setting)	○	●	●	●	●	○	●	✻
									About 24:00	○	●	●	●	○	●	●	
27	Night-time low noise operation end setting	○	●	○	○	●	○	○	About 6:00	○	●	●	●	●	●	○	
									About 7:00	○	●	●	●	●	○	●	
									About 8:00 (factory setting)	○	●	●	●	○	●	●	✻
28	Power transistor check mode	○	●	○	○	○	●	●	OFF	○	●	●	●	●	●	○	✻
									ON	○	●	●	●	●	○	●	
29	Capacity precedence setting	○	●	○	○	○	●	○	OFF	○	●	●	●	●	●	○	✻
									ON	○	●	●	●	●	○	●	
30	Demand setting 1	○	●	○	○	○	○	●	60 % demand	○	●	●	●	●	●	○	
									70 % demand	○	●	●	●	●	○	●	✻
									80 % demand	○	●	●	●	○	●	●	
32	Normal demand setting	○	○	●	●	●	●	●	OFF	○	●	●	●	●	●	○	✻
									ON	○	●	●	●	●	○	●	

The numbers in the "No." column represent the number of times to press the SET (BS2) button.

c. Monitor mode

To enter the monitor mode, push the MODE (BS1) button when in “Setting mode 1”.

<Selection of setting item>

Push the SET (BS2) button and set the LED display to a setting item.

<Confirmation on setting contents>

Push the RETURN (BS3) button to display different data of set items.

Push the RETURN (BS3) button and switches to the initial status of “Monitor mode”.

∗ Push the MODE (BS1) button and returns to “Setting mode 1”.

(V2765)

No.	Setting item	LED display							Data display
		H1P	H2P	H3P	H4P	H5P	H6P	H7P	
0	Various setting	◑	●	●	●	●	●	●	See below
1	C/H unified address	◑	●	●	●	●	●	○	Lower 6 digits
2	Low noise/demand address	◑	●	●	●	●	○	●	
3	Not used	◑	●	●	●	●	○	○	
4	Airnet address	◑	●	●	●	○	●	●	
5	Number of connected indoor units	◑	●	●	●	○	●	○	
7	Number of connected zone units (excluding outdoor and BS unit)	◑	●	●	●	○	○	○	
8	Number of outdoor units	◑	●	●	○	●	●	●	
11	Number of zone units (excluding outdoor and BS unit)	◑	●	●	○	●	○	○	Lower 6 digits
12	Number of terminal blocks	◑	●	●	○	○	●	●	Lower 4 digits: upper
13	Number of terminal blocks	◑	●	●	○	○	●	○	Lower 4 digits: lower
14	Contents of malfunction (the latest)	○	●	●	○	○	○	●	Malfunction code table
15	Contents of malfunction (1 cycle before)	○	●	●	○	○	○	○	Refer to page 138, 139.
16	Contents of malfunction (2 cycle before)	○	●	○	●	●	●	●	
20	Contents of retry (the latest)	○	●	○	●	○	●	●	
21	Contents of retry (1 cycle before)	○	●	○	●	○	●	○	
22	Contents of retry (2 cycle before)	○	●	○	●	○	○	●	
25	Normal judgment of outdoor units PC board	◑	●	○	○	●	●	○	Lower 2 digits: ○ ● Abnormal ● ○ Normal ● ● Unjudgment

The numbers in the "No." column represent the number of times to press the SET (BS2) button.

Setting item 0 Display contents of “Various setting”

EMG operation / backup operation setting	ON	◑	●	●	○	●	●	●
	OFF	◑	●	●	●	●	●	●
Defrost select setting	Short	◑	●	●	●	○	●	●
	Medium	◑	●	●	●	◑	●	●
	Long	◑	●	●	●	●	●	●
Te setting	H	◑	●	●	●	●	○	●
	M	◑	●	●	●	●	◑	●
	L	◑	●	●	●	●	●	●
Tc setting	H	◑	●	●	●	●	●	○
	M	◑	●	●	●	●	●	◑
	L	◑	●	●	●	●	●	●

Push the SET button and match with the LEDs No. 1 - 15, push the RETURN button, and confirm the data for each setting.

★ Data such as addresses and number of units is expressed as binary numbers; the two ways of expressing are as follows:

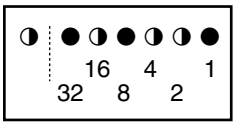

The No. 1 cool/heat unified address is expressed as a binary number consisting of the lower 6 digits. (0 - 63)

In ① the address is 010110 (binary number), which translates to 16 + 4 + 2 = 22 (base 10 number). In other words, the address is 22.

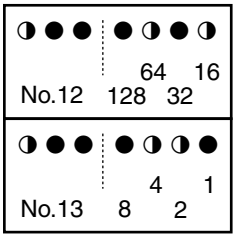

The number of terminal blocks for No. 12 and 13 is expressed as an 8-digit binary number, which is the combination of four upper, and four lower digits for No. 12 and 13 respectively. (0 - 128)
In ② the address for No. 12 is 0101, the address for No. 13 is 0110, and the combination of the two is 01010110 (binary number), which translates to 64 + 16 + 4 + 2 = 86 (base 10 number). In other words, the number of terminal block is 86.

★ See the preceding page for a list of data, etc. for No. 0 - 25.

3.2.2 Cool / Heat Mode Switching

There are the following 4 cool/heat switching modes.

① Set cool/heat separately for each outdoor unit system by indoor unit remote control.
② Set cool/heat separately for each outdoor unit system by cool/heat switching remote control.
③ Set cool/heat for more than one outdoor unit system simultaneously in accordance with unified master outdoor unit by indoor unit remote control.
④ Set cool/heat for more than one outdoor unit system simultaneously in accordance with unified master outdoor unit by cool/heat switching remote control.

---

① Set Cool / Heat Separately for Each Outdoor Unit System by Indoor Unit remote control

- ◆ It does not matter whether or not there is outdoor - outdoor unit wiring.
- ◆ Set outdoor unit PC board DS1-1 to IN (factory set).
- ◆ Set cool/heat switching to IND (individual) for “Setting mode 1” (factory set).

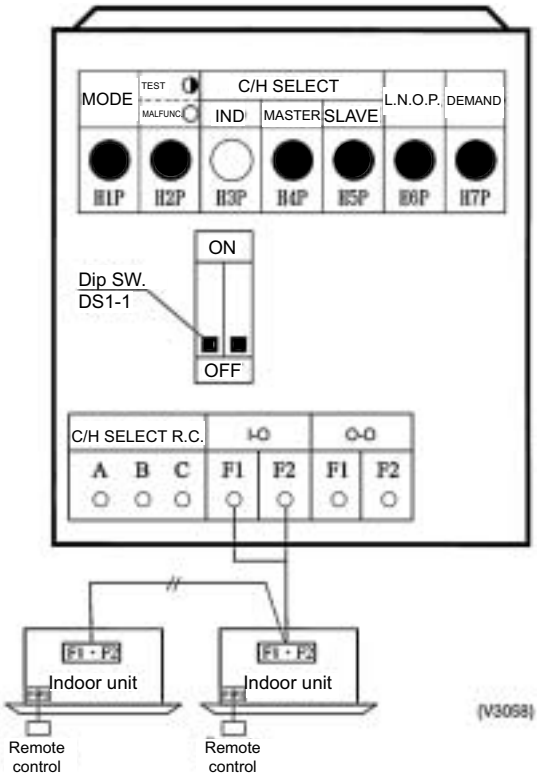

<Set the master unit (= indoor unit having the right to select the cooling/heating operation mode).>

In the case of wired remote controls

- After the check operation, **“CHANGEOVER UNDER CONTROL”** is flashing in all connected remote controls.
- Select an indoor unit to be used as the master unit in accordance with the request from the customer. (It is recommended to select an indoor unit which will be used most often as the master unit.)
- Press the operation mode selector button in the remote control of the indoor unit selected as the master unit.
- In that remote control, **“CHANGEOVER UNDER CONTROL”** disappears. That remote control will control changeover of the cooling/heating operation mode.
- In other remote controls, **“CHANGEOVER UNDER CONTROL”** lights.

For the details, refer to the installation manual supplied together with the indoor unit.

In the case of infrared remote controls

- After the check operation, the timer lamp is flashing in all connected indoor units.
- Select an indoor unit to be used as the master unit in accordance with the request from the customer. (It is recommended to select an indoor unit which will be used most often as the master unit.)
- Press the operation selector mode button in the remote control of the indoor unit selected as the master unit. A “peep” sound is emitted, and the timer lamp turns off in all indoor units.
- That indoor unit will control changeover of the cooling/heating operation mode.

② **Set Cool / Heat Separately for Each Outdoor Unit System by Cool/Heat Switching Remote control**

- ◆ It does not matter whether or not there is outdoor - outdoor unit wiring.
- ◆ Set outdoor unit PC board DS1-1 to OUT (factory set).
- ◆ Set cool/heat switching to IND (individual) for “Setting mode 1” (factory set).

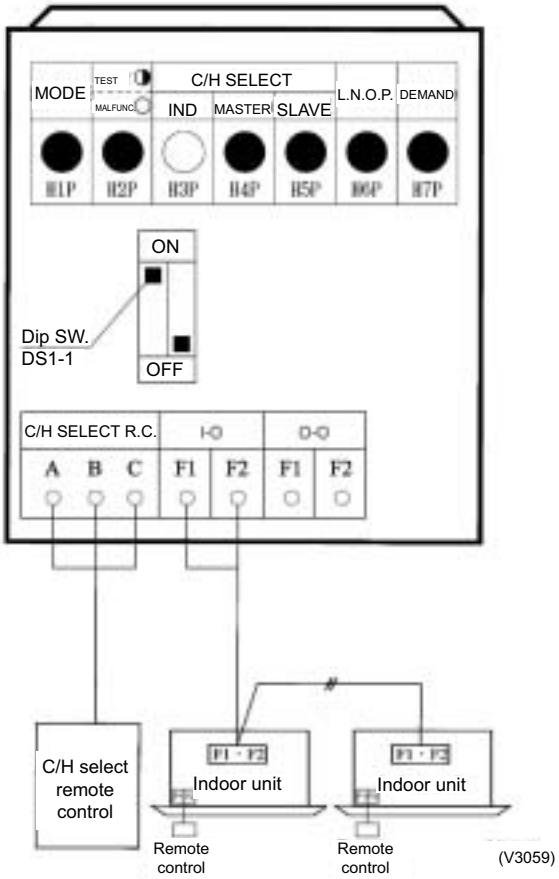

3.2.3 Setting of Low Noise Operation and Demand Operation

Setting of Low Noise Operation

By connecting the external contact input to the low noise input of the outdoor unit external control adapter (optional), you can lower operating noise by 2-3 dB.

When the low noise operation is carried out automatically at night (The external control adapter for outdoor unit is not required)

1. While in "Setting mode 2", select the setting condition (i.e., "Mode 1", "Mode 2", or "Mode 3") for set item No. 22 (Setting of nighttime low noise level).
2. If necessary, while in "Setting mode 2", select the setting condition (i.e., "20:00", "22:00", or "24:00") for set item No. 26 (Setting of start time of nighttime low noise operation).
   (Use the start time as a guide since it is estimated according to outdoor temperatures.)
3. If necessary, while in "Setting mode 2", select the setting condition (i.e., "06:00", "07:00", or "08:00") for set item No. 27 (Setting of end time of nighttime low noise operation).
   (Use the end time as a guide since it is estimated according to outdoor temperatures.)
4. If necessary, while in "Setting mode 2", set the setting condition for set item No. 29 (Setting of capacity precedence) to "ON".
   (If the condition is set to "ON", when the air-conditioning load reaches a high level, the system will be put into normal operation mode even during nighttime.)

Image of operation

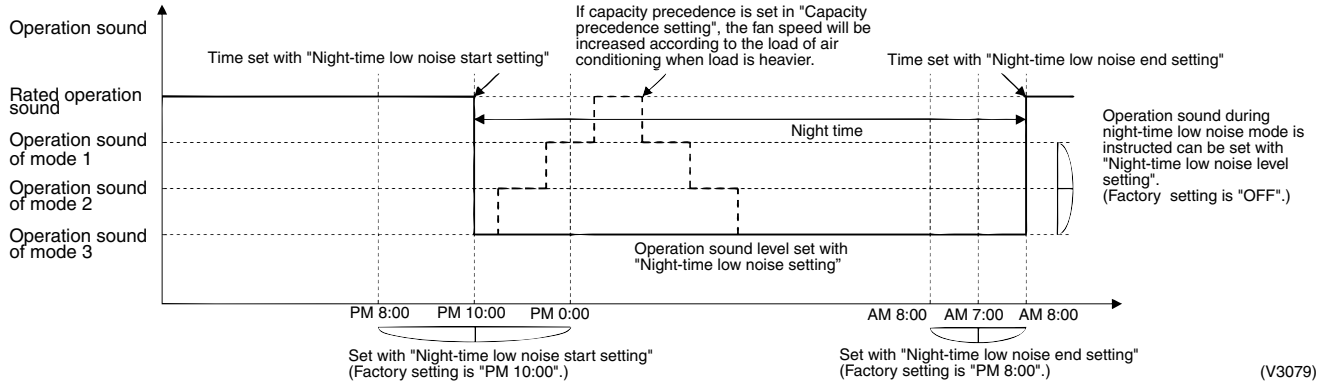

Setting of Demand Operation

By connecting the external contact input to the demand input of the outdoor unit external control adapter (optional), the power consumption of unit operation can be saved suppressing the compressor operating condition.

Set item	Condition	Content
Demand	Mode 1	The compressor operates at approx. 60% or less of rating.
	Mode 2	The compressor operates at approx. 70% or less of rating.
	Mode 3	The compressor operates at approx. 80% or less of rating.

When the normal demand operation is carried out. (Use of the external control adapter for outdoor unit is not required.)

1. While in "Setting mode 2", make setting of the set item No. 32 (Setting of constant demand) to "ON".
2. While in "Setting mode 2", select the set item No. 30 (Setting of Demand 1 level) and then set the setting condition to targeted mode.

Image of operation

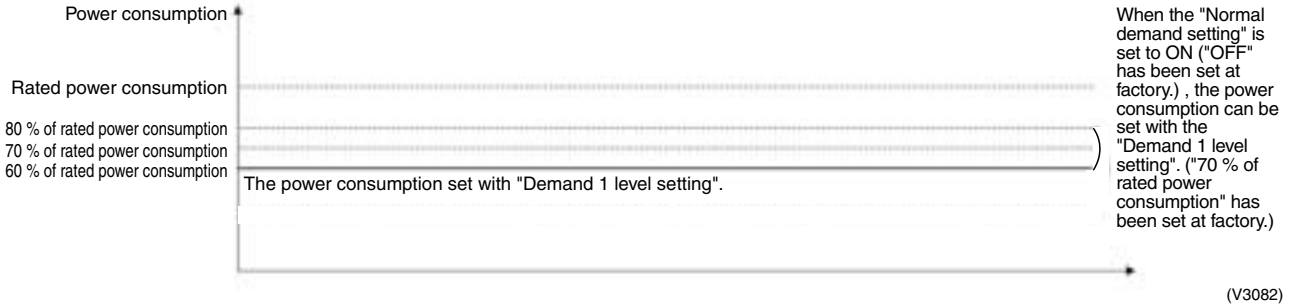

Detailed Setting Procedure of Low Noise Operation and Demand Control

1. Setting mode 1 (H1P off)

① In setting mode 2, push the BS1 (MODE button) one time. → Setting mode 1 is entered and H1P off.
During the setting mode 1 is displayed, “In low noise operation” and “In demand control” are displayed.

2. Setting mode 2 (H1P on)

① In setting 1, push and hold the BS1 (MODE button) for more than 5 seconds. → Setting mode 2 is entered and H1P lights.
② Push the BS2 (SET button) several times and match the LED display with the Setting No. you want.
③ Push the BS3 (RETURN button) one time, and the present setting content is displayed.
→ Push the BS2 (SET button) several times and match the LED display with the setting content (as shown on next page) you want.
④ Push the BS3 (RETURN button) two times. → Returns to ①.
⑤ Push the BS1 (MODE button) one time. → Returns to the setting mode 1 and turns H1P off.

○: ON ●: OFF ◑: Blink

Setting No.	Setting contents	① Setting No. indication							② Setting No. indication							Setting contents	③ Setting contents indication (Initial setting)						
		H1P	H2P	H3P	H4P	H5P	H6P	H7P	H1P	H2P	H3P	H4P	H5P	H6P	H7P		H1P	H2P	H3P	H4P	H5P	H6P	H7P
12	External low noise / Demand setting	○	●	●	●	●	●	●	○	●	●	○	○	●	●	NO (Factory set)	○	●	●	●	●	●	◑
																YES	○	●	●	●	●	◑	●
22	Night-time low noise setting								○	●	○	●	○	○	●	OFF (Factory setting)	○	●	●	●	●	●	●
																Mode 1	○	●	●	●	●	●	◑
																Mode 2	○	●	●	●	●	◑	●
																Mode 3	○	●	●	●	●	◑	◑
26	Night-time low noise start setting								○	●	○	○	●	○	●	PM 8:00	○	●	●	●	●	●	◑
																PM 10:00 (Factory setting)	○	●	●	●	●	◑	●
																PM 0:00	○	●	●	●	◑	●	●
27	Night-time low noise end setting								○	●	○	○	●	○	○	AM 6:00	○	●	●	●	●	●	◑
																AM 7:00	○	●	●	●	●	◑	●
																AM 8:00 (Factory setting)	○	●	●	●	◑	●	●
29	Capacity precedence setting								○	●	○	○	○	●	○	Low noise precedence (Factory setting)	○	●	●	●	●	●	◑
																Capacity precedence	○	●	●	●	●	◑	●
30	Demand setting 1								○	●	○	○	○	○	●	60 % of rated power consumption	○	●	●	●	●	●	◑
																70 % of rated power consumption (Factory setting)	○	●	●	●	●	◑	●
																80 % of rated power consumption	○	●	●	●	◑	●	●
32	Normal demand setting								○	●	●	●	●	●	●	OFF (Factory setting)	○	●	●	●	●	●	◑
																ON	○	●	●	●	●	◑	●

Setting mode indication section Setting No. indication section Set contents indication section

3.2.4 Setting of Refrigerant Additional Charging Operation

* **When the outdoor unit is stopped and the entire quantity of refrigerant cannot be charged from the stop valve on the liquid side, make sure to charge the remaining quantity of refrigerant using this procedure. If the refrigerant quantity is insufficient, the unit may malfunction.**

① Turn ON the power of the indoor unit and the outdoor unit.

② Make sure to completely open the stop valve on the gas side and the stop valve on the liquid side.

③ Connect the refrigerant charge hose to the service port (for additionally charging the refrigerant).

④ In the stopped status, set to ON the refrigerant additional charging operation Ⓐ in set mode 2 (H1P: Turn on).

⑤ The operation is automatically started.
(The LED indicator H2P flickers, and "Test run" and "Under centralized control" are displayed in the remote control.)

⑥ After charging the specified quantity of refrigerant, press the RETURN button (BS3) to stop the operation.

(The operation is automatically stopped within 30 minutes.
If charging is not completed within 30 minutes, set and perform the refrigerant additional charging operation Ⓐ again.
If the refrigerant additional charging operation is stopped soon, the refrigerant may be overcharged.
Never charge extra refrigerant.)

⑦ Disconnect the refrigerant charge hose.

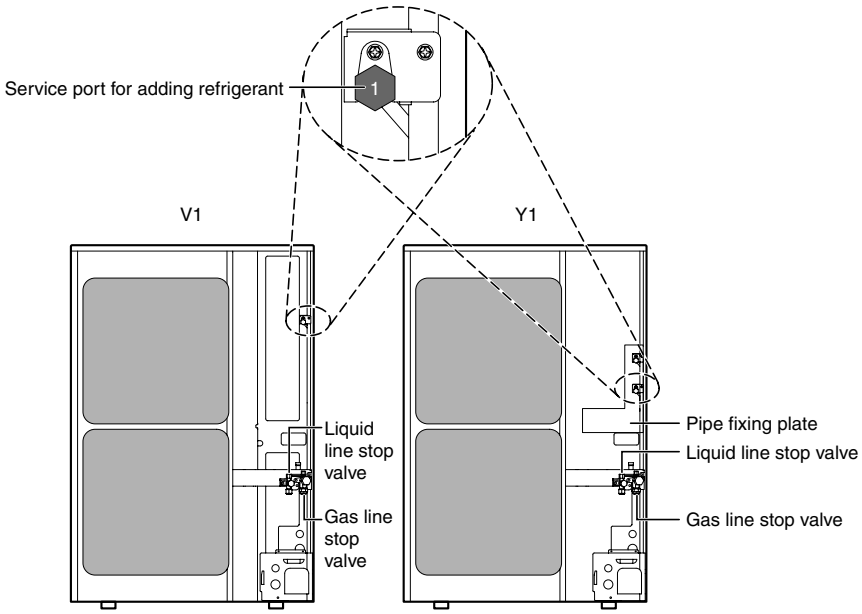

3.2.5 Setting of Refrigerant Recovery Mode

When carrying out the refrigerant collection on site, fully open the respective expansion valve of indoor and outdoor units
All indoor and outdoor unit's operation are prohibited.

[Operation procedure]

① In "Setting Mode 2" with units in stop mode, set "B Refrigerant Recovery / Vacuuming mode" to ON. The respective expansion valve of indoor and outdoor units are fully opened. "TEST OPERATION" and "UNDER CENTRALIZED CONTROL" are displayed on the remote control, and the indoor / outdoor unit operation is prohibited.
After setting, do not cancel "Setting Mode 2" until completion of refrigerant recovery operation.

② Collect the refrigerant using a refrigerant recovery unit. (See the operation manual attached to the refrigerant recovery unit for more detal.)

③ Press Mode button "BS1" once and reset "Setting Mode 2".

3.2.6 Setting of Vacuuming Mode

In order to perform vacuuming operation at site, fully open the expansion valves of indoor and outdoor units and turn on some solenoid valves.

[Operating procedure]

① In “Setting Mode 2” with units in stop mode, set “B Refrigerant Recovery / Vacuuming mode” to ON. The respective expansion valve of indoor and outdoor units are fully opened. “TEST OPERATION” and “UNDER CENTRALIZED CONTROL” are displayed on the remote control, and the indoor / outdoor unit operation is prohibited.
After setting, do not cancel “Setting Mode 2” until completion of Vacuuming operation.

② Use the vacuum pump to perform vacuuming operation.

③ Press Mode button “BS1” once and reset “Setting Mode 2”.

3.2.7 Check Operation

To prevent any trouble in the period of installation at site, the system is provided with a test operation mode enabling check for incorrect wiring, stop valve left in closed, coming out (or misplacing with suction pipe thermistor) or discharge pipe thermistor and judgment of piping length, refrigerant overcharging, and learning for the minimum opening degree of electronic expansion valve.

CHECK OPERATION FUNCTION

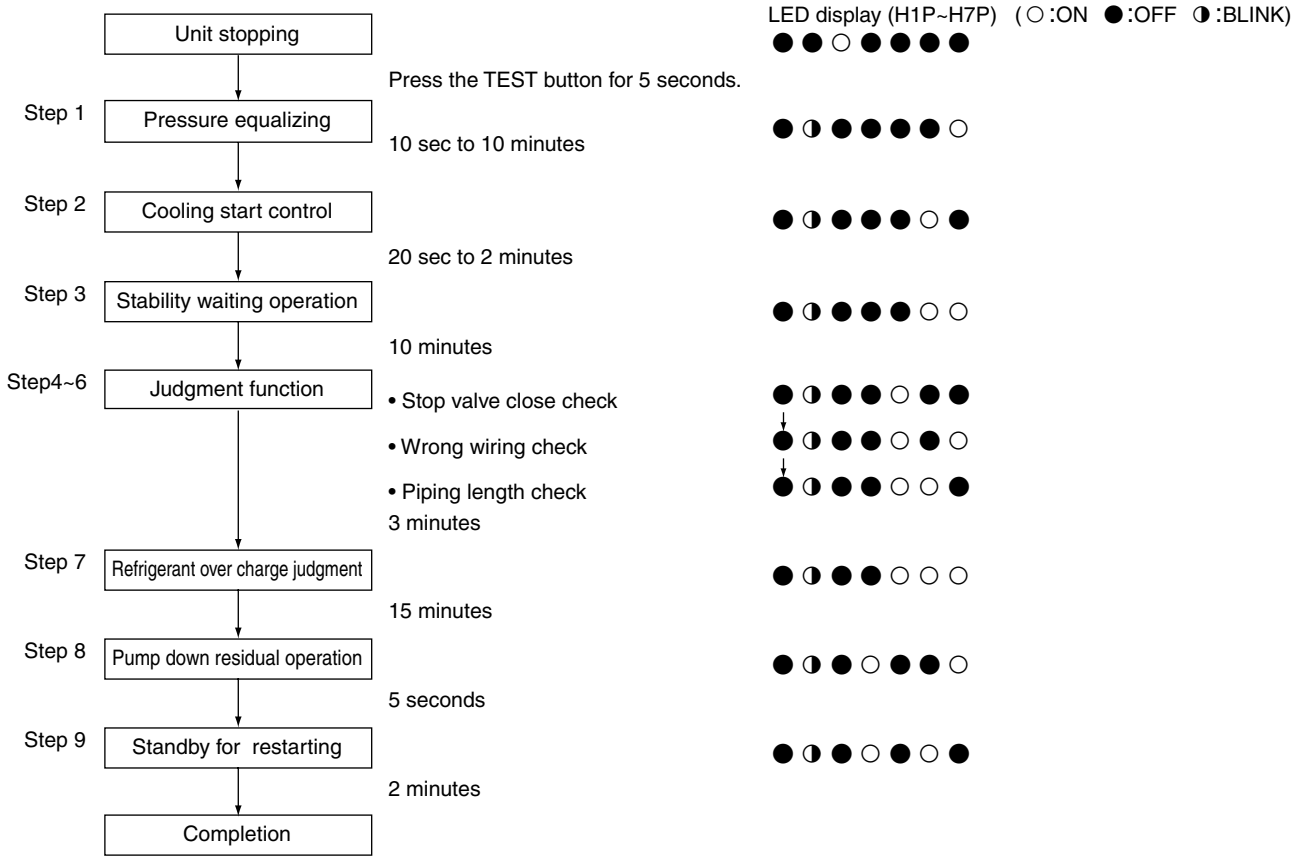

Part 7
Troubleshooting

1. Symptom-based Troubleshooting 125
2. Troubleshooting by Remote Control 128
   2.1 The INSPECTION / TEST Button.....128
   2.2 Self-diagnosis by Wired Remote Control 129
   2.3 Self-diagnosis by Wireless Remote Control 130
   2.4 Operation of the Remote Control's Inspection / Test Operation Button 132
   2.5 Remote Control Service Mode 133
   2.6 Remote Control Self-Diagnosis Function 135
3. Troubleshooting by Indication on the Remote Control 142
   3.1 "A0" Indoor Unit: Error of External Protection Device 142
   3.2 "A1" Indoor Unit: PC Board Defect 143
   3.3 "A3" Indoor Unit: Malfunction of Drain Level Control System (S1L).....144
   3.4 "A6" Indoor Unit: Fan Motor (M1F) Lock, Overload 146
   3.5 "A7" Indoor Unit: Malfunction of Swing Flap Motor (M1S) 147
   3.6 Abnormal Power Supply Voltage.....149
   3.7 "A9" Indoor Unit: Malfunction of Moving Part of Electronic Expansion Valve (Y1E).....150
   3.8 "AF" Indoor Unit: Drain Level above Limit 152
   3.9 "AJ" Indoor Unit: Malfunction of Capacity Determination Device.....153
   3.10 "C1" Indoor Unit: Failure of Transmission (Between Indoor unit PC Board and Fan PC Board).....154
   3.11 "C4" Indoor Unit: Malfunction of Thermistor (R2T) for Heat Exchanger.....156
   3.12 "C5" Indoor Unit: Malfunction of Thermistor (R3T) for Gas Pipes 157
   3.13 "C6" Indoor Unit: Failure of Combination (Between Indoor unit PC Board and Fan PC Board).....158
   3.14 "C9" Indoor Unit: Malfunction of Thermistor (R1T) for Suction Air 159
   3.15 "CA" Indoor Unit: Malfunction of Thermistor for Discharge Air 160
   3.16 "CC" Indoor Unit: Malfunction of Humidity Sensor System 161
   3.17 "CJ" Indoor Unit: Malfunction of Thermostat Sensor in Remote Control 162
   3.18 "E1" Outdoor Unit: PC Board Defect.....163
   3.19 "E3" Outdoor Unit: Actuation of High Pressure Switch.....164
   3.20 "E4" Outdoor Unit: Actuation of Low Pressure Sensor 166
   3.21 "E5" Inverter Compressor Motor Lock.....168
   3.22 "E7" Malfunction of Outdoor Unit Fan Motor 169
   3.23 "E9" Outdoor Unit: Malfunction of Moving Part of Electronic Expansion Valve (Y1E, Y3E).....170
   3.24 "F3" Outdoor Unit: Abnormal Discharge Pipe Temperature.....172
   3.25 "F6" Outdoor Unit: Refrigerant Overcharged 173
   3.26 "H9" Outdoor Unit: Malfunction of Thermistor (R1T) for Outdoor Air 174
   3.27 "J3" Outdoor Unit: Malfunction of Discharge Pipe Thermistor (R2T)....175
   3.28 "J5" Outdoor Unit: Malfunction of Thermistor (R3T, R5T) for Suction Pipe 1, 2 176

3.29 “J6” Outdoor Unit: Malfunction of Thermistor (R6T) 177
3.30 “J7” Outdoor Unit: Malfunction of Thermistor (R7T) for Outdoor Unit Liquid Pipe 178
3.31 “J9” Outdoor Unit: Malfunction of Thermistor (R4T) 179
3.32 “JA” Outdoor Unit: Malfunction of High Pressure Sensor 180
3.33 “JC” Outdoor Unit: Malfunction of Low Pressure Sensor 181
3.34 “L1” Outdoor Unit: Malfunction of PC Board 182
3.35 “L4” Outdoor Unit: Malfunction of Inverter Radiating Fin Temperature Rise 183
3.36 “L5” Outdoor Unit: Inverter Compressor Abnormal 184
3.37 “L8” Outdoor Unit: Inverter Current Abnormal 185
3.38 “L9” Outdoor Unit: Inverter Start up Error 186
3.39 “LC” Outdoor Unit: Malfunction of Transmission between Inverter and Control PC Board 187
3.40 “P1” Outdoor Unit: High Voltage of Capacitor in Main Inverter Circuit 188
3.41 “U0” Low Pressure Drop Due to Refrigerant Shortage or Electronic Expansion Valve Failure 189
3.42 “U2” Power Supply Insufficient or Instantaneous Failure 191
3.43 “U3” Check Operation not Executed 193
3.44 “U4” Malfunction of Transmission between Indoor Units and Outdoor Units 194
3.45 “U5” Malfunction of Transmission between Remote Control and Indoor Unit 196
3.46 “U8” Malfunction of Transmission between Main and Sub Remote Controls 197
3.47 “U9” Malfunction of Transmission between Indoor and Outdoor Units in the Same System 198
3.48 “UA” Excessive Number of Indoor Units 200
3.49 “UC” Address Duplication of Central Remote Control 201
3.50 “UE” Malfunction of Transmission between Central Remote Control and Indoor Unit 202
3.51 “UF” System is not Set yet 204
3.52 “UH” Malfunction of System, Refrigerant System Address Undefined 205

4. Troubleshooting by Indication on the Centralized Remote Control 206
4.1 “UE” Malfunction of Transmission between Centralized Remote Control and Indoor Unit 206
4.2 “M1” PC Board Defect 207
4.3 “M8” Malfunction of Transmission between Optional Controllers for Centralized Control 208
4.4 “MA” Improper Combination of Optional Controllers for Centralized Control 209
4.5 “MC” Address Duplication, Improper Setting 211

5. Troubleshooting by Indication on the Unified ON/OFF Controller 212
5.1 Operation Lamp Blinks 212
5.2 Display “Under Host Computer Integrate Control” Blinks (Repeats Single Blink) 214
5.3 Display “Under Host Computer Integrate Control” Blinks (Repeats Double Blink) 217

1. Symptom-based Troubleshooting

	Symptom		Supposed Cause	Countermeasure
1	The system does not start operation at all.		Blowout of fuse(s)	Turn Off the power supply and then replace the fuse(s).
			Cutout of breaker(s)	• If the knob of any breaker is in its OFF position, turn ON the power supply. • If the knob of any circuit breaker is in its tripped position, do not turn ON the power supply. 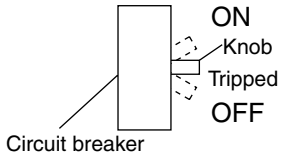
			Power failure	After the power failure is reset, restart the system.
			Open phase in power supply cable	Check power supply. After that, properly connect the power supply cable, and then turn ON the power supply.
2	The system starts operation but makes an immediate stop.		Blocked air inlet or outlet of indoor or outdoor unit	Remove obstacle(s).
			Clogged air filter(s)	Clean the air filter(s).
3	The system does not cool or heat air well.		Blocked air inlet or outlet of indoor or outdoor unit	Remove obstacle(s).
			Clogged air filter(s)	Clean the air filter(s).
			Enclosed outdoor unit(s)	Remove the enclosure.
			Improper set temperature	Set the temperature to a proper degree.
			Airflow rate set to "LOW"	Set it to a proper airflow rate.
			Improper direction of air diffusion	Set it to a proper direction.
			Open window(s) or door(s)	Shut it tightly.
		[In cooling]	Direct sunlight received	Hang curtains or shades on windows.
		[In cooling]	Too many persons staying in a room	
		[In cooling]	Too many heat sources (e.g. OA equipment) located in a room	
4	The system does not operate.	The system stops and immediately restarts operation.	If the OPERATION lamp on the remote control turns ON, the system will be normal. These symptoms indicate that the system is controlled so as not to put unreasonable loads on the system.	Normal operation. The system will automatically start operation after a lapse of five minutes.
		Pressing the TEMP ADJUST button immediately resets the system.		
		The remote control displays "UNDER CENTRALIZED CONTROL", which blinks for a period of several seconds when the OPERATION button is depressed.	The system is controlled with centralized control. Blinking display indicates that the system cannot be operated using the remote Control.	Operate the system using the COOL/HEAT centralized remote control.
		The system stops immediately after turning ON the power supply.	The system is in preparation mode of micro computer operation.	Wait for a period of approximately one minute.
5	The system makes intermittent stops.	The remote control displays malfunction codes "U4" and "U5", and the system stops but restarts after a lapse of several minutes.	The system stops due to an interruption in communication between units caused by electrical noises coming from equipment other than air conditioners.	Remove causes of electrical noises. If these causes are removed, the system will automatically restart operation.

	Symptom		Supposed Cause	Countermeasure
6	COOL-HEAT selection is disabled.	The remote control displays "UNDER CENTRALIZED CONTROL".	This remote control has no option to select cooling operation.	Use a remote control with option to select cooling operation.
		The remote control displays "UNDER CENTRALIZED CONTROL", and the COOL-HEAT selection remote control is provided.	COOL-HEAT selection is made using the COOL-HEAT selection remote control.	Use the COOL-HEAT selection remote control to select cool or heat.
7	The system conducts fan operation but not cooling or heating operation.	This symptom occurs immediately after turning ON the power supply.	The system is in preparation mode of operation.	Wait for a period of approximately 10 minutes.
8	The airflow rate is not reproduced according to the setting.	Even pressing the AIRFLOW RATE SET button makes no changes in the airflow rate.	In heating operation, when the room temperature reaches the set degree, the outdoor unit will stop while the indoor unit is brought to fan LL operation so that no one gets cold air. Furthermore, if fan operation mode is selected when other indoor unit is in heating operation, the system will be brought to fan LL operation. (The fan LL operation is also enabled while in oil return mode in cooling operation.)	Normal operation.
9	The airflow direction is not reproduced according to the setting.	The airflow direction is not corresponding to that displayed on the remote Control. The flap does not swing.	Automatic control	Normal operation.
10	A white mist comes out from the system.	<Indoor unit> In cooling operation, the ambient humidity is high. (This indoor unit is installed in a place with much oil or dust.)	Uneven temperature distribution due to heavy stain of the inside of the indoor unit	Clean the inside of the indoor unit.
		<Indoor unit> Immediately after cooling operation stopping, the ambient temperature and humidity are low.	Hot gas (refrigerant) flown in the indoor unit results to be vapor from the unit.	Normal operation.
		<Indoor and outdoor units> After the completion of defrosting operation, the system is switched to heating operation.	Defrosted moisture turns to be vapor and comes out from the units.	Normal operation.

	Symptom		Supposed Cause	Countermeasure
11	The system produces sounds.	<Indoor unit> Immediately after turning ON the power supply, indoor unit produces "ringing" sounds.	These are operating sounds of the electronic expansion valve of the indoor unit.	Normal operation. This sound becomes low after a lapse of approximately one minute.
		<Indoor and outdoor units> "Hissing" sounds are continuously produced while in cooling or defrosting operation.	These sounds are produced from gas (refrigerant) flowing respectively through the indoor and outdoor units.	Normal operation.
		<Indoor and outdoor units> "Hissing" sounds are produced immediately after the startup or stop of the system, or the startup or stop of defrosting operation.	These sounds are produced when the gas (refrigerant) stops or changes flowing.	Normal operation.
		<Indoor unit> Faint sounds are continuously produced while in cooling operation or after stopping the operation.	These sounds are produced from the drain discharge device in operation.	Normal operation.
		<Indoor unit> "Creaking" sounds are produced while in heating operation or after stopping the operation.	These sounds are produced from resin parts expanding and contracting with temperature changes.	Normal operation.
		<Indoor unit> Sounds like "trickling" or the like are produced from indoor units in the stopped state.	On VRV systems, these sounds are produced when other indoor units in operation. The reason is that the system runs in order to prevent oil or refrigerant from dwelling.	Normal operation.
		<Outdoor unit> Pitch of operating sounds changes.	The reason is that the compressor changes the operating frequency.	Normal operation.
12	Dust comes out from the system.	Dust comes out from the system when it restarts after the stop for an extended period of time.	Dust, which has deposited on the inside of indoor unit, is blown out from the system.	Normal operation.
13	Odors come out from the system.	In operation	Odors of room, cigarettes or else adsorbed to the inside of indoor unit are blown out.	The inside of the indoor unit should be cleaned.
14	Outdoor unit fan does not rotate.	In operation	The reason is that fan revolutions are controlled to put the operation to the optimum state.	Normal operation.
15	LCD display "88" appears on the remote control.	Immediately after turning ON the power supply	The reason is that the system is checking to be sure the remote control is normal.	Normal operation. This code is displayed for a period of approximately one minute at maximum.
16	The outdoor unit compressor or the outdoor unit fan does not stop.	After stopping operation	It stops in order to prevent oil or refrigerant from dwelling.	Normal operation. It stops after a lapse of approximately 5 to 10 minutes.
17	The outdoor gets hot.	While stopping operation	The reason is that the compressor is warmed up to provide smooth startup of the system.	Normal operation.
18	Hot air comes out from the system even though it stops.	Hot air is felt while the system stops.	On VRV systems, small quantity of refrigerant is fed to indoor units in the stopped state when other indoor units are in operation.	Normal operation.
19	The system does not cool air well.	The system is in dry operation.	The reason is that the dry operation serves not to reduce the room temperature where possible.	Change the system to cooling operation.

2. Troubleshooting by Remote Control

2.1 The INSPECTION / TEST Button

The following modes can be selected by using the [Inspection/Test Operation] button on the remote control.

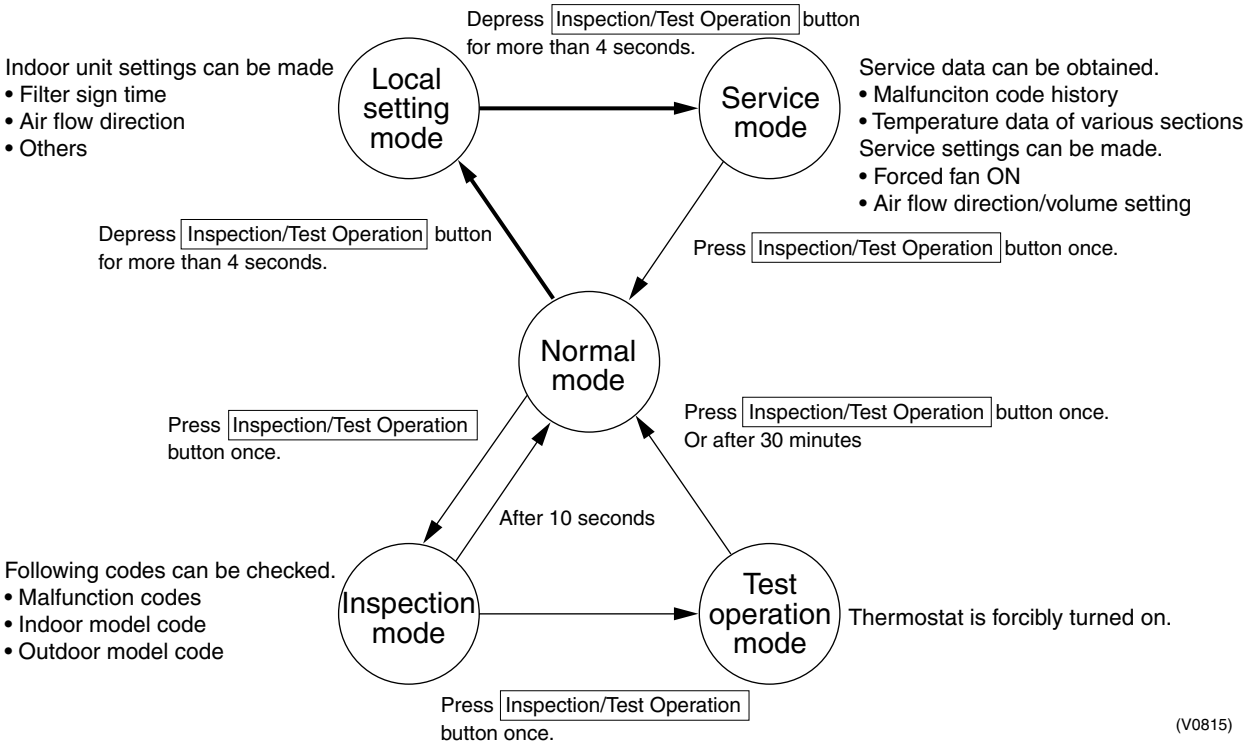

2.2 Self-diagnosis by Wired Remote Control

Explanation

If operation stops due to malfunction, the remote control's operation LED blinks, and malfunction code is displayed. (Even if stop operation is carried out, malfunction contents are displayed when the inspection mode is entered.) The malfunction code enables you to tell what kind of malfunction caused operation to stop. See page 136 for malfunction code and malfunction contents.

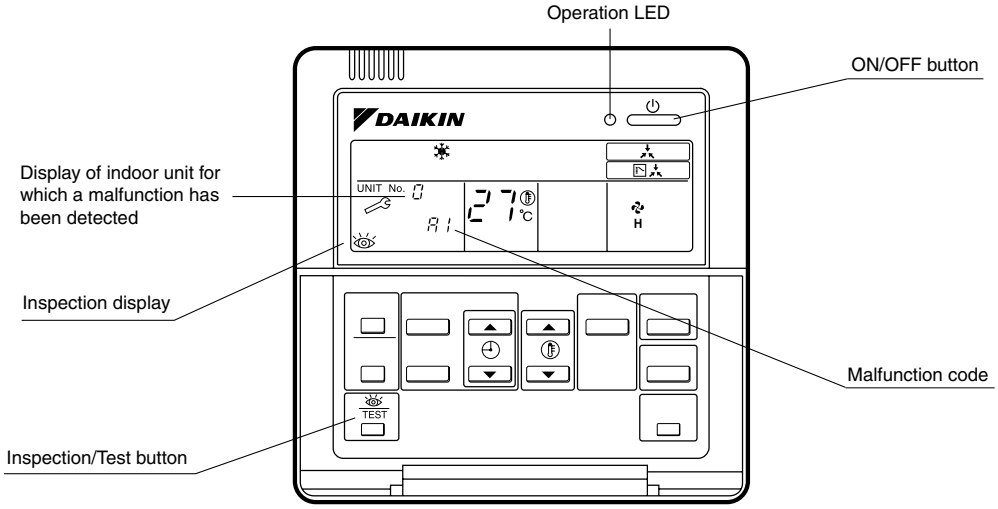

Note:

1. Pressing the INSPECTION/TEST button will blink the check indication.
2. While in check mode, pressing and holding the ON/OFF button for a period of five seconds or more will clear the failure history indication shown above. In this case, on the codes display, the malfunction code will blink twice and then change to "00" (=Normal), the Unit No. will change to "0", and the operation mode will automatically switch from check mode to normal mode (displaying the set temperature).

2.3 Self-diagnosis by Infrared Remote Control

In the Case of BRC7C Type BRC7E Type BRC4C Type

If equipment stops due to a malfunction, the operation indicating LED on the light reception section flashes.
The malfunction code can be determined by following the procedure described below. (The malfunction code is displayed when an operation error has occurred. In normal condition, the malfunction code of the last problem is displayed.)

1. Press the INSPECTION/TEST button to select “Inspection.”
   The equipment enters the inspection mode. The “Unit” indication lights and the Unit No. display shows flashing “0” indication.
2. Set the Unit No.
   Press the UP or DOWN button and change the Unit No. display until the buzzer (*1) is generated from the indoor unit.
   *1 Number of beeps
   3 short beeps : Conduct all of the following operations.
   1 short beep : Conduct steps 3 and 4.
   Continue the operation in step 4 until a buzzer remains ON. The continuous buzzer indicates that the malfunction code is confirmed.
   Continuous beep : No abnormality.
3. Press the MODE selector button.
   The left “0” (upper digit) indication of the malfunction code flashes.
4. Malfunction code upper digit diagnosis
   Press the UP or DOWN button and change the malfunction code upper digit until the malfunction code matching buzzer (*2) is generated.

■ The upper digit of the code changes as shown below when the UP and DOWN buttons are pressed.

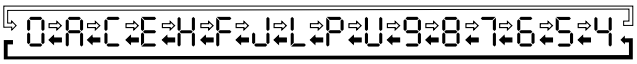

⇨ **“Advance” button** ⬅ **“Backward” button** (SE006)

*2 Number of beeps
Continuous beep : Both upper and lower digits matched. (Malfunction code confirmed)
2 short beeps : Upper digit matched.
1 short beep : Lower digit matched.

5. Press the MODE selector button.
   The right “0” (lower digit) indication of the malfunction code flashes.
6. Malfunction code lower digit diagnosis
   Press the UP or DOWN button and change the malfunction code lower digit until the continuous malfunction code matching buzzer (*2) is generated.

■ The lower digit of the code changes as shown below when the UP and DOWN buttons are pressed.

⇨ **"Advance" button** ⬅ **"Backward" button** (SE007)

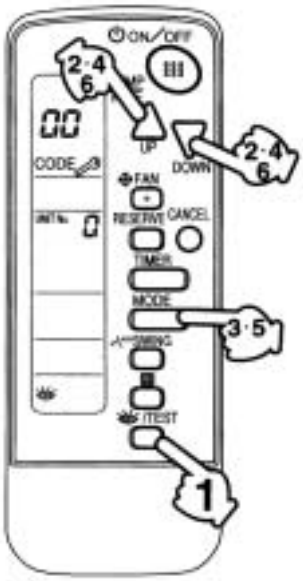

Normal status
Enters inspection mode from normal status when the INSPECTION/TEST button is pressed.

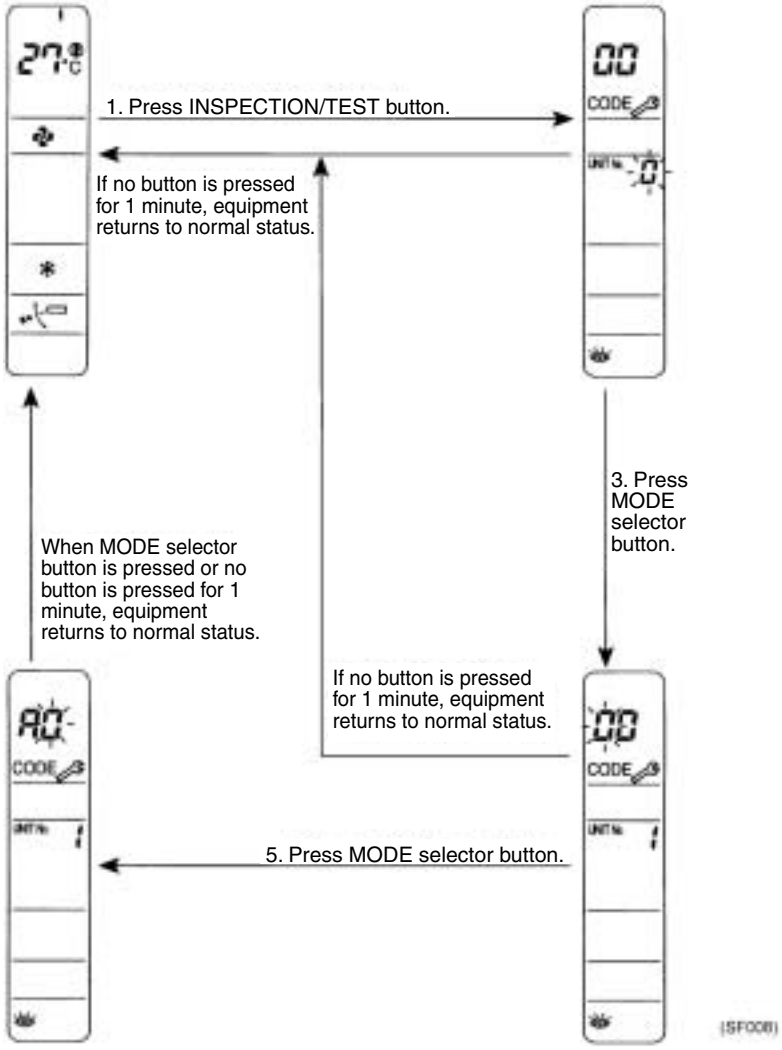

(SF008)

2.4 Operation of the Remote Control's Inspection / Test Operation Button

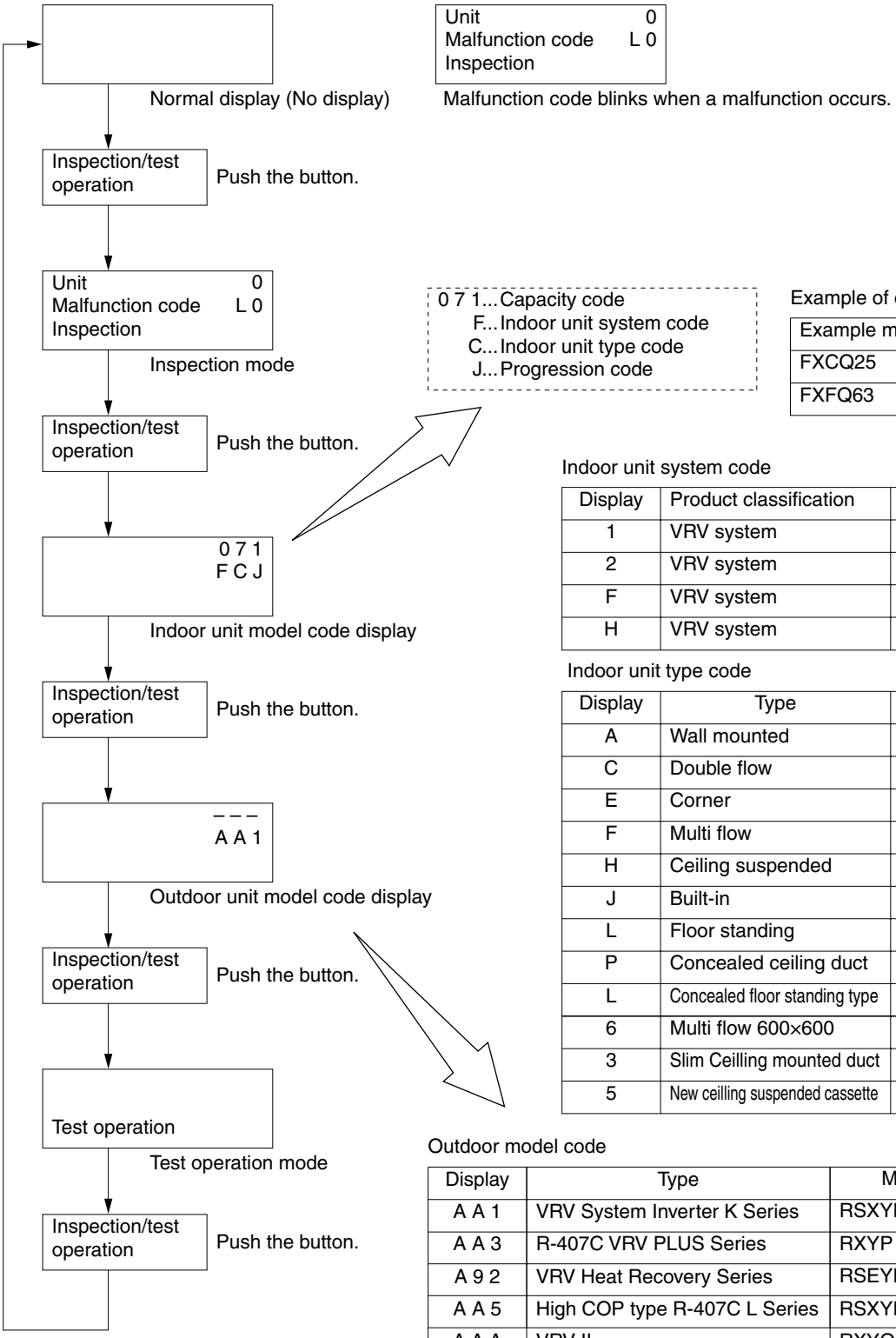

0 7 1... Capacity code
F... Indoor unit system code
C... Indoor unit type code
J... Progression code

Example of capacity code display

Example model	Display
FXCQ25	028
FXFQ63	071

Indoor unit system code

Display	Product classification	System classification
1	VRV system	(VAV indoor unit)
2	VRV system	Outdoor air processing unit
F	VRV system	Standard indoor unit
H	VRV system	New ceilling suspended cassette

Indoor unit type code

Display	Type	Model
A	Wall mounted	FXAQ
C	Double flow	FXCQ
E	Corner	FXKQ
F	Multi flow	FXFQ
H	Ceiling suspended	FXHQ
J	Built-in	FXSQ
L	Floor standing	FXLQ
P	Concealed ceiling duct	FXMQ
L	Concealed floor standing type	FXNQ
6	Multi flow 600×600	FXZQ
3	Slim Ceilling mounted duct	FXDQ
5	New ceilling suspended cassette	FXUQ

Outdoor model code

Display	Type	Model
A A 1	VRV System Inverter K Series	RSXYP
A A 3	R-407C VRV PLUS Series	RXYP
A 9 2	VRV Heat Recovery Series	RSEYP
A A 5	High COP type R-407C L Series	RSXYP-L
A A A	VRV II	RXYQ-M
A A C	VRV II M/C	RXYQ-MA
A A E	VRV III	RXYQ-P
A 8 E	VRV III-S	RXYSQ-P

2.5 Remote Control Service Mode

How to Enter the Service Mode

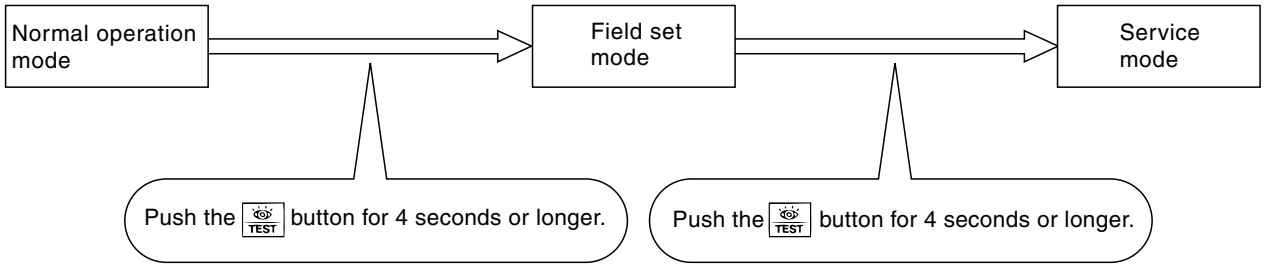

(VF020)

Service Mode Operation Method

1. Select the mode No.
Set the desired mode No. with the button.
(For infrared remote control, Mode 43 only can be set.)

2. Select the unit No. (For group control only)
Select the indoor unit No. to be set with the time mode . (For infrared remote control, button.)

3. Make the settings required for each mode. (Modes 41, 44, 45)
In case of Mode 44, 45, push button to be able to change setting before setting work. (LCD “code” blinks.)
For details, refer to the table in next page.

4. Define the setting contents. (Modes 44, 45)
Define by pushing the timer button.
After defining, LCD “code” changes blinking to ON.

5. Return to the normal operation mode.
Push the TEST button one time.

Mode No	Function	Contents and operation method	Remote control display example
40	Malfunction hysteresis display	Display malfunction hysteresis. The history No. can be changed with the button.	Unit 1 Malfunction code 40 2-U4 Malfunction code Hystory No: 1 - 9 1: Latest (VE007)
41	Display of sensor and address data	Display various types of data. Select the data to be displayed with the button. Sensor data 0: Thermostat sensor in remote control. 1: Suction 2: Liquid pipe 3: Gas pipe Address data 4: Indoor unit address 5: Outdoor unit address 6: BS unit address 7: Zone control address 8: Cool/heat group address 9: Demand / low noise address	Sensor data display Unit No. Sensor type 1 1 2 7 41 Temperature ºC Address display Unit No. Address type 1 8 1 41 Address (VE008)
43	Forced fan ON	Manually turn the fan ON by each unit. (When you want to search for the unit No.) By selecting the unit No. with the button, you can turn the fan of each indoor unit on (forced ON) individually.	Unit 1 43 (VE009)
44	Individual setting	Set the fan speed and air flow direction by each unit Select the unit No. with the time mode button. Set the fan speed with the button. Set the air flow direction with the button.	Unit 1 Code 44 1 3 Fan speed 1: Low 3: High Air flow direction P0 - P4 (VE010)
45	Unit No. transfer	Transfer unit No. Select the unit No. with the button. Set the unit No. after transfer with the button.	Present unit No. Unit 1 Code 0 2 45 Unit No. after transfer (VE011)

2.6 Remote Control Self-Diagnosis Function

The remote control switches are equipped with a self diagnosis function so that more appropriate maintenance can be carried out. If a malfunction occurs during operation, the operation lamp, malfunction code and display of malfunctioning unit No. let you know the contents and location of the malfunction.
When there is a stop due to malfunction, the contents of the malfunction given below can be diagnosed by a combination of operation lamp, INSPECTION display of the liquid crystal display and display of malfunction code. It also lets you know the unit No. during group control.

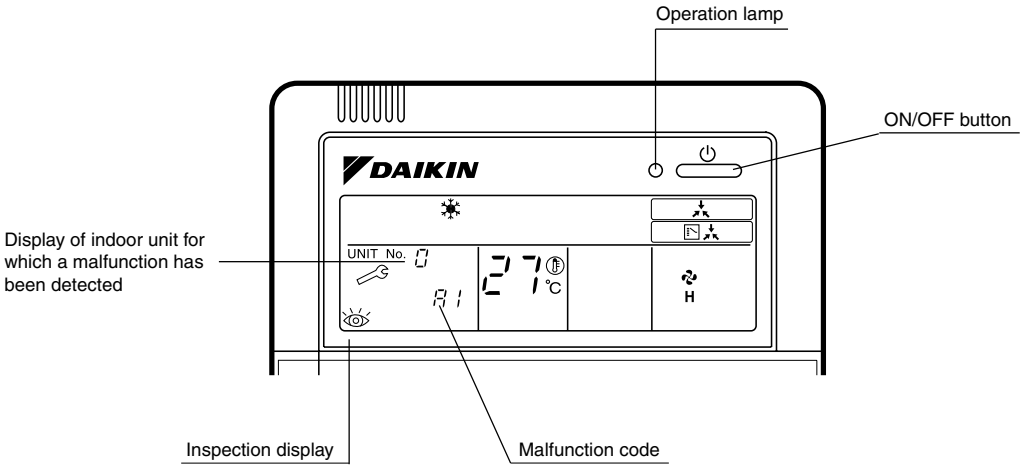

(VL050)

○: ON ●: OFF ◑: Blink

	Malfunction code	Operation lamp	Malfunction contents	Page Referred
Indoor Unit	A0	◑	Error of external protection device	142
	A1	◑	PC board defect, E^2 PROM defect	143
	A3	◑	Malfunction of drain level control system (S1L)	144
	A6	◑	Fan motor (M1F) lock, overload	146
	A7	○	Malfunction of swing flap motor (M1S)	147
	A8	◑	Abnormal power supply voltage	149
	A9	◑	Malfunction of moving part of electronic expansion valve (Y1E)	150
	AF	○	Drain level above limit	152
	AJ	◑	Malfunction of capacity setting	153
	C1	◑	Failure of transmission (between indoor unit PC board and fan PC board)	154
	C4	◑	Malfunction of thermistor (R2T) for heat exchange (loose connection, disconnection, short circuit, failure)	156
	C5	◑	Malfunction of thermistor (R3T) for gas pipes (loose connection, disconnection, short circuit, failure)	157
	C6	◑	Failure of combination (between indoor unit PC board and fan PC board)	158
	C9	◑	Malfunction of thermistor (R1T) for suction air (loose connection, disconnection, short circuit, failure)	159
	CA	◑	Malfunction of thermistor for discharge air (loose connection, disconnection, short circuit, failure)	160
	CC	○	Malfunction of humidity sensor system	161
	CJ	○	Malfunction of thermostat sensor in remote control	162
Outdoor Unit	E1	◑	PC board defect	163
	E3	◑	Actuation of high pressure switch	164
	E4	◑	Actuation of low pressure sensor	166
	E5	◑	Compressor motor lock	168
	E6	◑	Standard compressor lock or over current	—
	E7	◑	Malfunction of outdoor unit fan motor	169
	E9	◑	Malfunction of moving part of electronic expansion valve (Y1E, Y3E)	170
	F3	◑	Abnormal discharge pipe temperature	172
	F6	◑	Refrigerant overcharged	173
	H3	○	Failure of high pressure switch	—
	H4	◑	Actuation of low pressure switch	—
	H7	◑	Abnormal outdoor fan motor signal	—
	H9	◑	Malfunction of thermistor (R1T) for outdoor air (loose connection, disconnection, short circuit, failure)	174
	J2	◑	Current sensor malfunction	—
	J3	◑	Malfunction of discharge pipe thermistor (R2T) (loose connection, disconnection, short circuit, failure)	175
	J5	◑	Malfunction of thermistor (R3T, R5T) for suction pipe (loose connection, disconnection, short circuit, failure)	176
	J6	◑	Malfunction of thermistor (R6T) for heat exchanger (loose connection, disconnection, short circuit, failure)	177
	J7	◑	Malfunction of thermistor (R7T) for outdoor unit liquid pipe	178
	J9	◑	Malfunction of subcooling heat exchanger gas pipe thermistor (R4T)	179
	JA	◑	Malfunction of high pressure sensor	180
	JC	◑	Malfunction of low pressure sensor	181
	L0	◑	Inverter system error	—
	L1	◑	Malfunction of PC board	182
	L4	◑	Malfunction of inverter radiating fin temperature rise	183
	L5	◑	Inverter compressor abnormal	184
	L8	◑	Inverter current abnormal	185
	L9	◑	Inverter start up error	186

○: ON ●: OFF ◑: Blink

	Malfunction code	Operation lamp	Malfunction contents	Page Referred
Outdoor Unit	LA	◑	Malfunction of power unit	—
	LC	◑	Malfunction of transmission between inverter and control PC board	187
	P1	◑	High voltage of capacitor in main inverter circuit.	188
System	U0	○	Low pressure drop due to refrigerant shortage or electronic expansion valve failure	189
	U1	◑	Reverse phase / open phase	—
	U2	◑	Power supply insufficient or instantaneous failure	191
	U3	◑	Check operation is not completed.	193
	U4	◑	Malfunction of transmission between indoor and outdoor units	194
	U5	◑	Malfunction of transmission between remote control and indoor unit	196
	U5	●	Failure of remote control PC board or setting during control by remote control	196
	U7	◑	Malfunction of transmission between outdoor units	—
	U8	◑	Malfunction of transmission between main and sub remote controls (malfunction of sub remote control)	197
	U9	◑	Malfunction of transmission between indoor unit and outdoor unit in the same system	198
	UA	◑	Excessive number of indoor units	200
	UC	○	Address duplication of central remote control	201
	UE	◑	Malfunction of transmission between central remote control and indoor unit	202
	UF	◑	System is not set yet	204
	UH	◑	Malfunction of system, refrigerant system address undefined	205
Central remote control and Schedule Timer	UE	◑	Malfunction of transmission between centralized remote control and indoor unit	206
	M1	○ or ●	PC board defect	207
	M8	○ or ●	Malfunction of transmission between optional controls for centralized control	208
	MA	○ or ●	Improper combination of optional controllers for centralized control	209
	MC	○ or ●	Address duplication, improper setting	211
Heat Reclaim Ventilation	64	○	Indoor unit's air thermistor error	—
	65	○	Outside air thermistor error	—
	68	○	Malfunction of HVU	—
	6A	○	Damper system alarm	—
	6A	◑	Damper system + thermistor error	—
	6F	○	Malfunction of simple remote control	—
	94	◑	Internal transmission error	—

The system operates for malfunction codes indicated in black squares, however, be sure to check and repair.

Malfunction code indication by outdoor unit PC board

<Monitor mode>

To enter the monitor mode, push the MODE (BS1) button when in "Setting mode 1".

<Selection of setting item>

Push the SET (BS2) button and set the LED display to a setting item.

<Confirmation of malfunction 1>

Push the RETURN (BS3) button once to display "First digit" of malfunction code.

<Confirmation of malfunction 2>

Push the SET (BS2) button once to display "Second digit" of malfunction code.

<Confirmation of malfunction 3>

Push the SET (BS2) button once to display "malfunction location".

<Confirmation of malfunction 4>

Push the SET (BS2) button once to display "master or slave 1 or slave 2" and "malfunction location".

Push the RETURN (BS3) button and switches to the initial status of "Monitor mode".

∗ Push the MODE (BS1) button and returns to "Setting mode 1".

Detail description on next page.

Contents of malfunction		Malfunction code
In-phase malfunction of DIII Net	Detection of DIII Net	E1
Abnormal discharge pressure	HPS activated	E3
Abnormal suction pressure	Abnormal Pe	E4
Compressor lock	Detection of INV compressor lock	E5
Over load, over current, abnormal lock of outdoor unit fan motor	Detection of DC fan 1 motor lock	E7
	Detection of DC fan 2 motor lock	
Malfunction of electronic expansion valve	EV1	E9
	EV3	
Faulty sensor of outdoor air temperature	Faulty Ta sensor (short)	H9
Abnormal discharge pipe temperature	Abnormal Td	F3
Abnormal heat exchanger temperature	Refrigerant over charge	F6
Faulty sensor of discharge pipe temperature	Faulty Tdi sensor (short)	J3
Faulty sensor of suction pipe temperature	Faulty Ts1 sensor (short)	J5
	Faulty Ts2 sensor (short)	
Faulty sensor of heat exchanger temperature	Faulty Tb sensor (short)	J6
Malfunction of the liquid pipe temperature sensor	Faulty Tl sensor (short)	J7
Faulty sensor of subcool heat exchanger temperature	Faulty Tsh sensor (short)	J9
Faulty sensor of discharge pressure	Faulty Pc sensor (short)	JA
Faulty sensor of suction pressure	Faulty Pe sensor (short)	JC
Faulty Inverter PC board	Faulty IPM	L1
	Abnormal Current sensor offset	
	Abnormal IGBT	
	Faulty Current sensor	
	Abnormal SP-PAM over-voltage	
Inverter radiation fin temperature rising	Over heating of inverter radiation fin temperature	L4
DC output over current	Inverter instantaneous over current	L5
Electronic thermal	Electronic thermal switch 1	L8
	Electronic thermal switch 2	
	Out-of-step	
	Speed down after startup	
	Lightening detection	
Stall prevention (Limit time)	Stall prevention (Current increasing)	L9
	Stall prevention (Faulty start up)	
	Abnormal wave form in startup	
	Out-of-step	
Transmission error between inverter and outdoor unit	Inverter transmission error	LC

○: ON ●: OFF ◑:Blink

Malfunction code	Confirmation of malfunction 1							Confirmation of malfunction 2							Confirmation of malfunction 3							Confirmation of malfunction 4						
	H1P	H2P	H3P	H4P	H5P	H6P	H7P	H1P	H2P	H3P	H4P	H5P	H6P	H7P	H1P	H2P	H3P	H4P	H5P	H6P	H7P	H1P	H2P	H3P	H4P	H5P	H6P	H7P
E1	◑			●	●	◑	◑	◑			●	●	●	◑	◑	○	●	●	●	●	●	◑	○	○	●	●	◑	◑
E3								◑			●	●	◑	◑	◑			●	●	●	●	◑			●	●		
E4								◑			●	◑	●	●	◑			●	●	●	●	◑			●	●		
E5								◑			●	◑	●	◑	◑			●	●	●	●	◑			●	●		
E7								◑			●	◑	◑	◑	◑			●	●	●	●	◑			●	◑	∗1	
															◑			●	●	●	◑	◑			●	◑		
E9								◑			◑	●	●	◑	◑			●	●	●	●	◑			●	●		
															◑			●	●	●	●	◑			◑	●		
H9								◑			◑	●	●	◑	◑			●	●	●	●	◑			●	●	∗1	
F3	◑			●	◑	●	◑	◑			●	●	◑	◑	◑			●	●	●	●	◑			●	●	∗1	
F6								◑			●	◑	◑	●	◑			●	●	●	●	◑			●	●	◑	◑
J3	◑			●	◑	◑	●	◑			●	●	◑	◑	◑			●	●	●	●	◑			●	●		
J5								◑			●	◑	●	◑	◑			●	●	●	●	◑			●	●		
															◑			●	●	●	●	◑			●	◑		
J6								◑			●	◑	◑	●	◑			●	●	●	●	◑			●	●		
J7								◑			●	◑	◑	◑	◑			●	●	●	●	◑			●	●	∗1	
J9								◑			◑	●	●	◑	◑			●	●	●	●	◑			●	●		
JA								◑			◑	●	◑	●	◑			●	●	●	●	◑			●	●		
JC								◑			◑	◑	●	●	◑			●	●	●	●	◑			●	●		
L1	◑			●	◑	◑	◑	◑			●	●	●	◑	◑			●	●	●	●	◑			●	●	●	●
								◑			●	●	●	◑	◑			●	●	●	●	◑			●	●	●	◑
								◑			●	●	●	◑	◑			●	●	●	●	◑			●	●	◑	●
								◑			●	●	●	◑	◑			●	●	●	●	◑			●	●	◑	◑
								◑			●	●	●	◑	◑			●	●	●	●	◑			●	◑	●	●
L4								◑			●	◑	●	●	◑			●	●	●	●	◑			●	●		
L5								◑			●	◑	●	◑	◑			●	●	●	●	◑			●	●		
L8								◑			◑	●	●	●	◑			●	●	●	●	◑			●	●		
															◑			●	●	●	●	◑			●	◑		
															◑			●	●	●	●	◑			◑	●		
															◑			●	●	●	◑	◑			●	●	∗1	
L9								◑			◑	●	●	◑	◑			●	●	●	●	◑			●	●		
															◑			●	●	●	●	◑			●	◑		
															◑			●	●	●	●	◑			◑	●		
LC								◑			◑	◑	●	●	◑			●	●	●	●	◑			●	◑		

Display of contents of malfunction (first digit)

Display of contents of malfunction (second digit)

Display 1 of malfunction in detail

Display 2 of malfunction in detail

∗1	●	●	Master
	●	◑	Slave1
	◑	●	Slave2
	◑	◑	System

<Monitor mode>

To enter the monitor mode, push the MODE (BS1) button when in “Setting mode 1”.

<Selection of setting item>

Push the SET (BS2) button and set the LED display to a setting item.

<Confirmation of malfunction 1>

Push the RETURN (BS3) button once to display "First digit" of malfunction code.

<Confirmation of malfunction 2>

Push the SET (BS2) button once to display "Second digit" of malfunction code.

<Confirmation of malfunction 3>

Push the SET (BS2) button once to display "malfunction location".

<Confirmation of malfunction 4>

Push the SET (BS2) button once to display "master or slave 1 or slave 2" and "malfunction location".

Push the RETURN (BS3) button and switches to the initial status of “Monitor mode”.

∗ Push the MODE (BS1) button and returns to “Setting mode 1”.

Detail description on next page.

Contents of malfunction		Malfunction code
Open phase/Power supply imbalance	Imbalance of inverter power supply voltage	P1
Faulty temperature sensor of inverter radiation fin	Faulty thermistor of inverter fin	P4
Refrigerant shortage	Refrigerant shortage alarm	U0
Abnormal power supply voltage	Insufficient Inverter voltage	U2
	Faulty charge of capacitor in main inverter circuit	
	Malfunction due to SP-PAM overvoltage	
	Malfunction due to P-N short circuit	
No implementation of test-run		U3
Transmission error between indoor and outdoor unit	I/O transmission error	U4
	I/O transmission error	
Transmission error of other system	Indoor unit system abnormal in other system or other indoor unit system abnormal in own system	U9
Erroneous field setting	System transmission malfunction	UA
	Overconnection malfunction of indoor units	
	Malfunction of field setting	
	Refrigerant abnormal	
	Connection error (BP unit)	
Faulty system malfunction	Wiring error (Auto-address error)	UH
Conflict in wiring and piping, no setting for system	Conflict in wiring and piping	UF

○: ON ●: OFF ◑:Blink

Malfunction code	Confirmation of malfunction 1							Confirmation of malfunction 2							Confirmation of malfunction 3							Confirmation of malfunction 4						
	H1P	H2P	H3P	H4P	H5P	H6P	H7P	H1P	H2P	H3P	H4P	H5P	H6P	H7P	H1P	H2P	H3P	H4P	H5P	H6P	H7P	H1P	H2P	H3P	H4P	H5P	H6P	H7P
P1	◑			◑	●	●	●	◑			●	●	●	◑	◑			●	●	●	●	◑			●	●	∗1	
P4								◑			●	◑	●	●	◑			●	●	●	●	◑			●	●		
U0	◑			◑	●	●	◑	◑			●	●	●	●	◑			●	●	●	●	◑			●	●	◑	◑
U2								◑			●	●	◑	●	◑			●	●	●	●	◑			●	●	∗1	
															◑			●	●	●	●				●	◑		
															◑			●	●	●	●	◑			●	●	◑	●
															◑			●	●	●	●	◑			●	●	●	◑
U3								◑			●	●	◑	◑	◑			●	●	●	●	◑			●	●	◑	◑
															◑			●	●	●	●	◑			●	◑	◑	◑
U4								◑			●	◑	●	●	◑			●	●	●	●	◑			●	●	◑	◑
															◑			●	●	●	●	◑			●	◑	◑	◑
U9								◑			◑	●	●	◑	◑			●	●	●	●	◑			●	●	◑	◑
UA								◑			◑	●	◑	●	◑			●	●	●	●	◑			●	●	◑	◑
															◑			●	●	●	●	◑			●	◑	◑	◑
															◑			●	●	●	●	◑			◑	●	◑	◑
															◑			●	●	●	◑	◑			●	●	◑	◑
															◑			●	●	◑	●	◑			●	◑	◑	◑
UH								◑			◑	●	◑	◑	◑			●	●	●	●	◑			●	●	◑	◑
UF								◑			◑	◑	◑	◑	◑			●	●	●	●	◑			●	●	◑	◑

Display of contents of malfunction (first digit)

Display of contents of malfunction (second digit)

Display 1 of malfunction in detail

Display 2 of malfunction in detail

∗1		
●	●	Master
●	◑	Slave1
◑	●	Slave2
◑	◑	System

3. Troubleshooting by Indication on the Remote Control

3.1 "A0" Indoor Unit: Error of External Protection Device

Remote Control Display

A0

Applicable Models

All indoor unit models

Method of Malfunction Detection

Malfunction Decision Conditions

Supposed Causes

- Actuation of external protection device
- Improper field set
- Defect of indoor unit PC board

Troubleshooting

Caution Be sure to turn off power switch before connect or disconnect connector, or parts damage may be occurred.

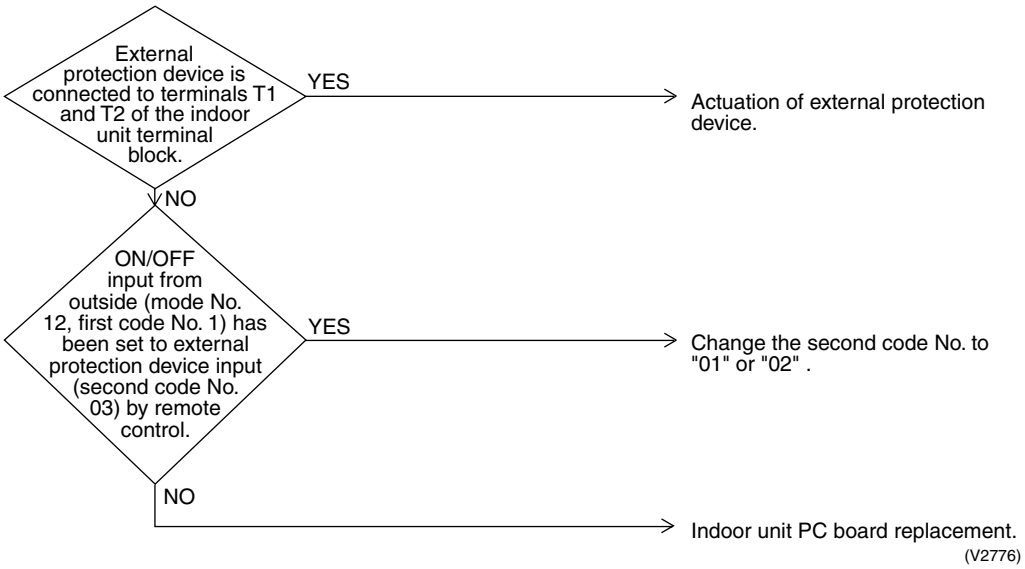

3.2 "A1" Indoor Unit: PC Board Defect

Remote Control Display

A1

Applicable Models

All indoor unit models

Method of Malfunction Detection

Check data from E²PROM.

Malfunction Decision Conditions

When data could not be correctly received from the E²PROM
E²PROM : Type of nonvolatile memory. Maintains memory contents even when the power supply is turned off.

Supposed Causes

- Defect of indoor unit PC board

Troubleshooting

Caution Be sure to turn off power switch before connect or disconnect connector, or parts damage may be occurred.

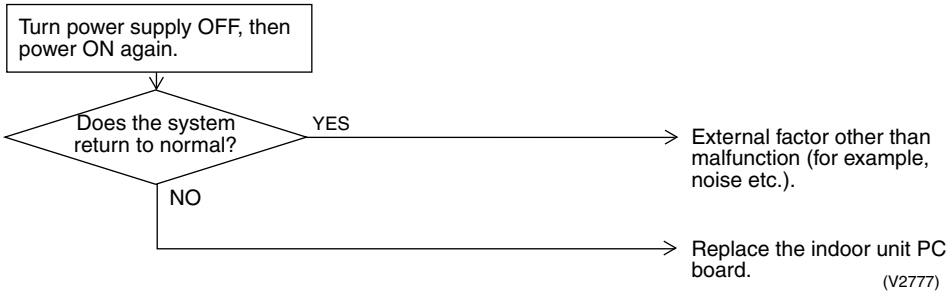

3.3 "A3" Indoor Unit: Malfunction of Drain Level Control System (S1L)

Remote Control Display	A3
Applicable Models	FXCQ, FXFQ, FXZQ, FXKQ, FXSQ, FXMQ, FXHQ (Option), FXAQ (Option)
Method of Malfunction Detection	By float switch OFF detection
Malfunction Decision Conditions	When rise of water level is not a condition and the float switch goes OFF.
Supposed Causes	■ 220~240V power supply is not provided ■ Defect of float switch or short circuit connector ■ Defect of drain pump ■ Drain clogging, upward slope, etc. ■ Defect of indoor unit PC board ■ Loose connection of connector

Troubleshooting

Caution Be sure to turn off power switch before connect or disconnect connector, or parts damage may be occurred.

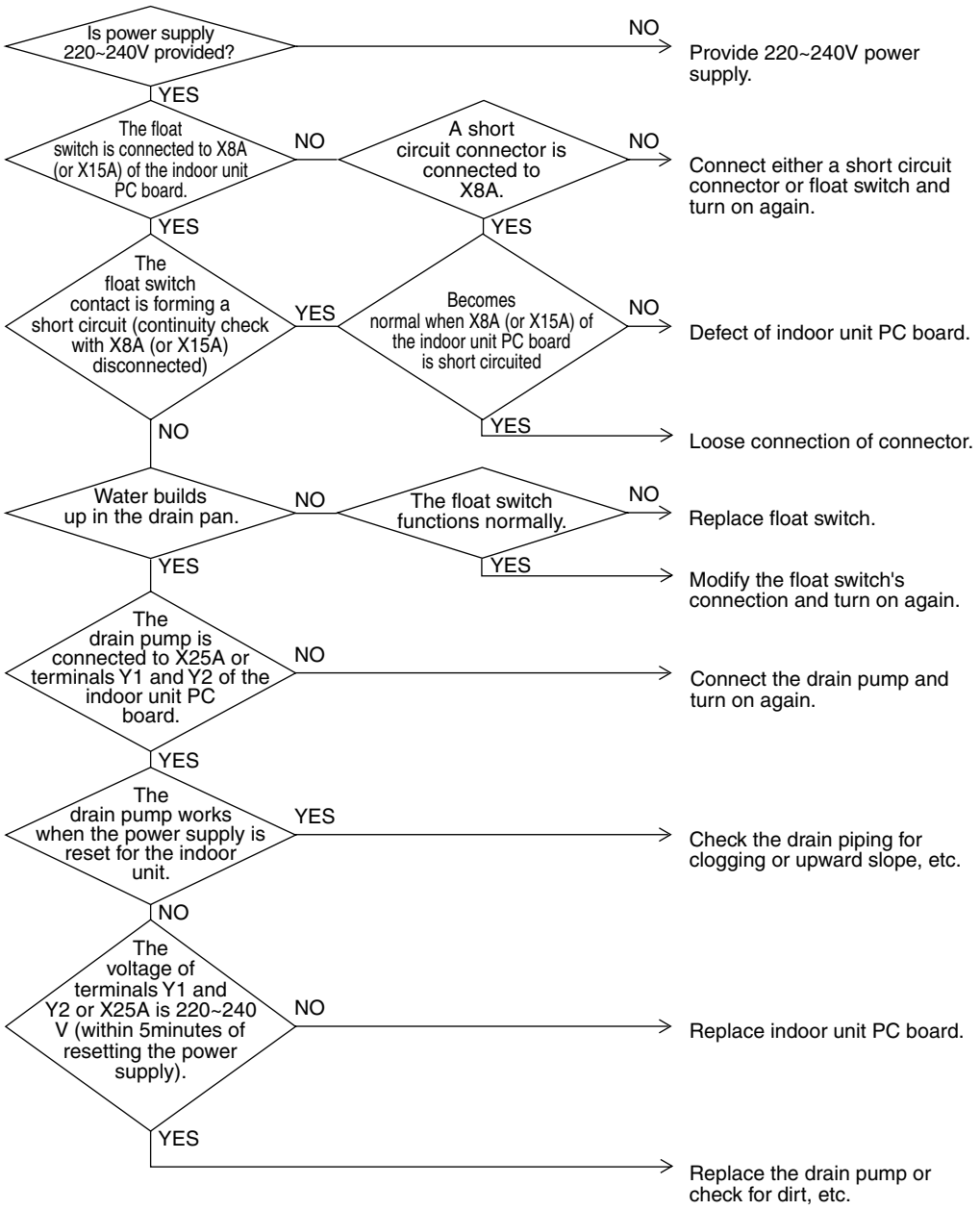

3.4 "A6" Indoor Unit: Fan Motor (M1F) Lock, Overload

Remote Control Display

A6

Applicable Models

All indoor unit models

Method of Malfunction Detection

Detection by failure of signal for detecting number of turns to come from the fan motor

Malfunction Decision Conditions

When number of turns can't be detected even when output voltage to the fan is maximum

Supposed Causes

- Fan motor lock
- Disconnected or faulty wiring between fan motor and PC board

Troubleshooting

Caution Be sure to turn off power switch before connect or disconnect connector, or parts damage may be occurred.

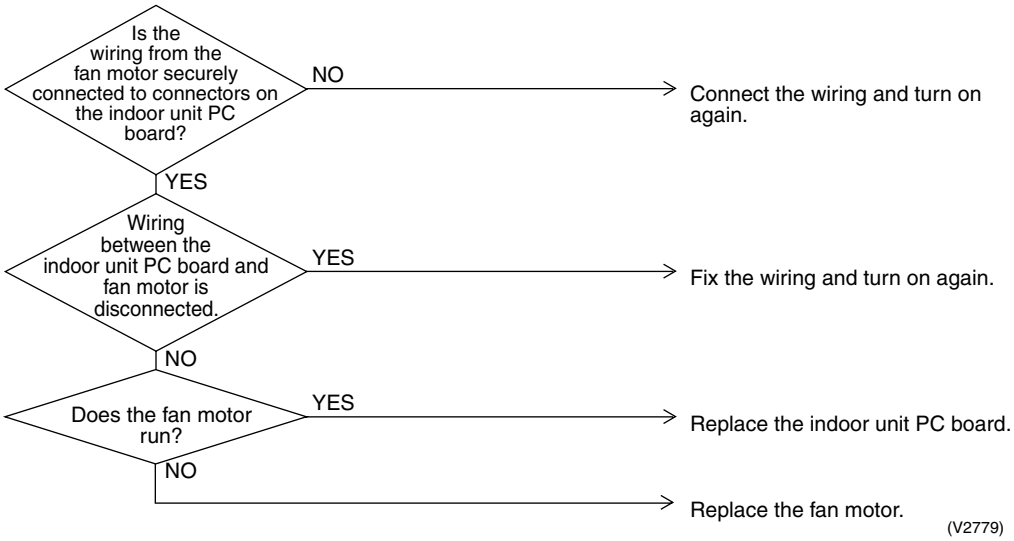

3.5 "A7" Indoor Unit: Malfunction of Swing Flap Motor (M1S)

Remote Control Display	A7
Applicable Models	FXCQ, FXKQ, FXZQ, FXHQ, FXUQ
Method of Malfunction Detection	Utilizes ON/OFF of the limit switch when the motor turns.
Malfunction Decision Conditions	When ON/OFF of the microswitch for positioning cannot be reversed even though the swing flap motor is energized for a specified amount of time (about 30 seconds).
Supposed Causes	■ Defect of swing motor ■ Defect of connection cable (power supply and limit switch) ■ Defect of air flow direction adjusting flap-cam ■ Defect of indoor unit PC board

Troubleshooting

Caution Be sure to turn off power switch before connect or disconnect connector, or parts damage may be occurred.

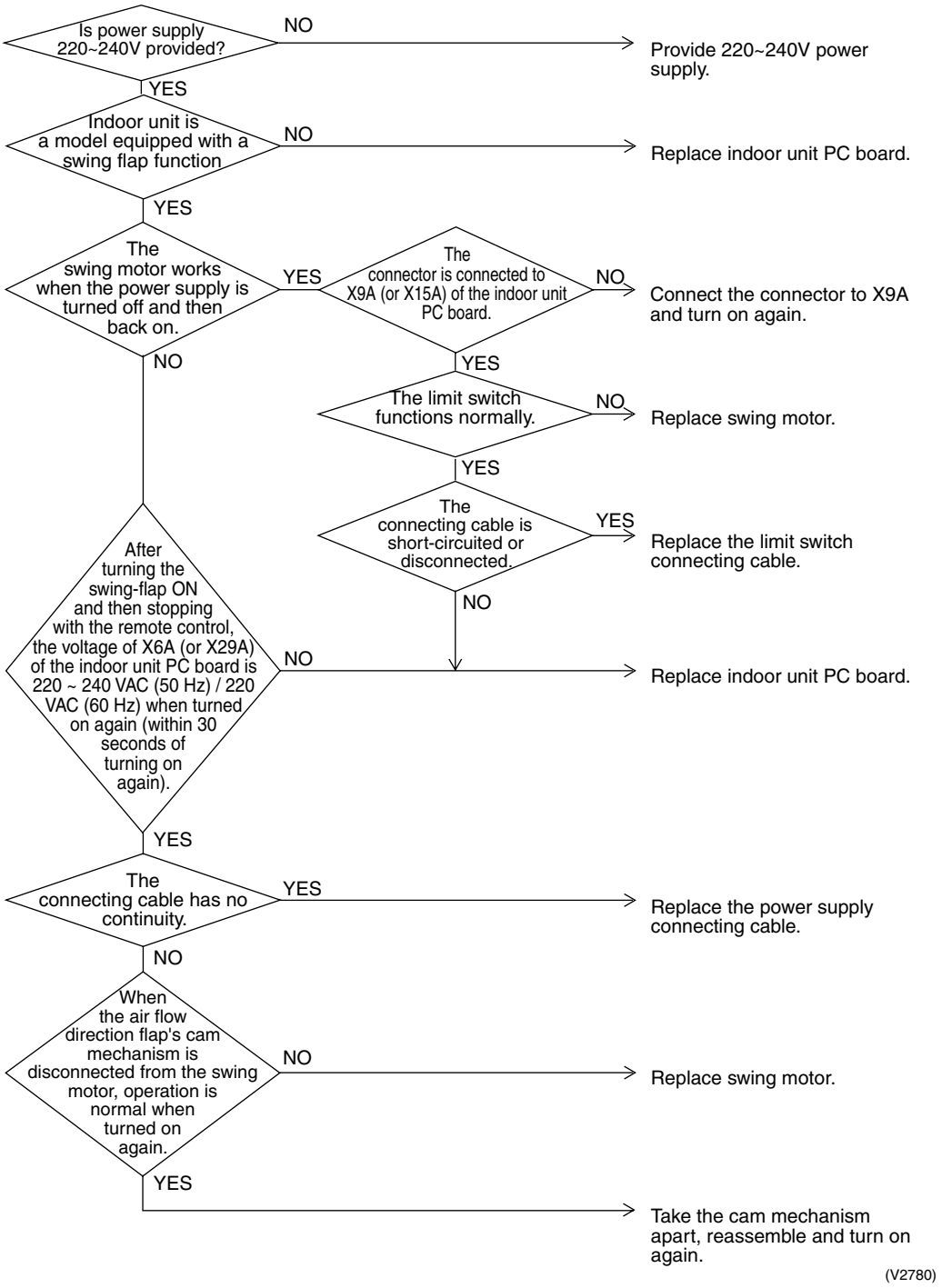

3.6 Abnormal Power Supply Voltage

Remote Control Display

A8

Applicable Models

FXMQ40~125P

Method of Malfunction Detection

Detect malfunction checking the input voltage of fan motor.

Malfunction Decision Conditions

When the input voltage of fan motor is 150V and below, or 386V and above.

Supposed Causes

The possible causes are:

- Power-supply voltage malfunction.
- Connection defect on signal line.
- Wiring defect.
- Instantaneous blackout, others.

Troubleshooting

Caution Be sure to turn off power switch before connect or disconnect connector, or parts damage may be occurred.

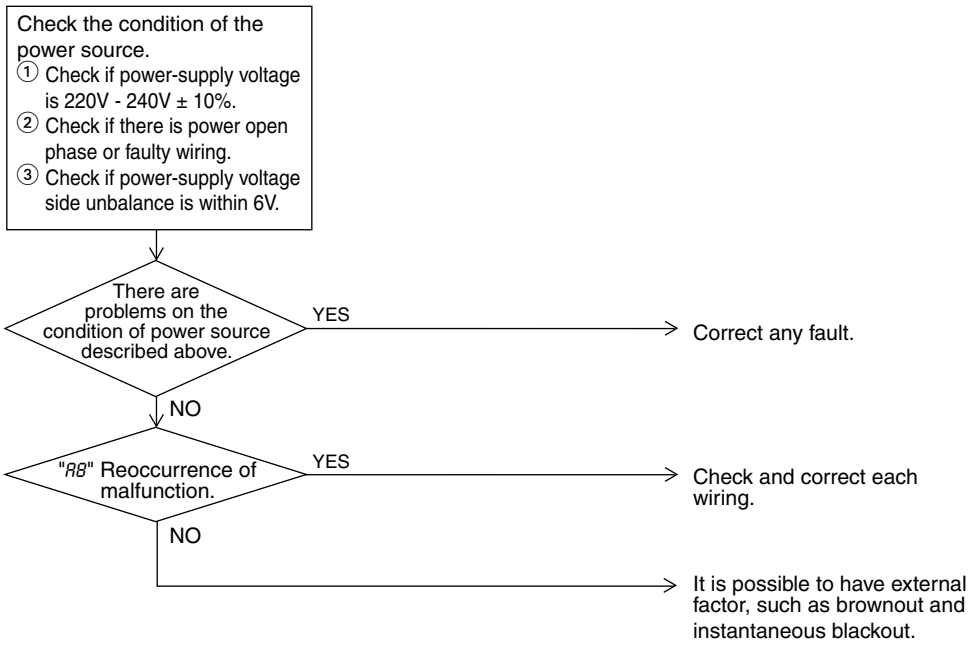

3.7 "A9" Indoor Unit: Malfunction of Moving Part of Electronic Expansion Valve (Y1E)

Remote Control Display

A9

Applicable Models

All indoor unit models

Method of Malfunction Detection

Malfunction Decision Conditions

Supposed Causes

- Malfunction of moving part of electronic expansion valve
- Defect of indoor unit PC board
- Defect of connecting cable

Troubleshooting

Caution Be sure to turn off power switch before connect or disconnect connector, or parts damage may be occurred.

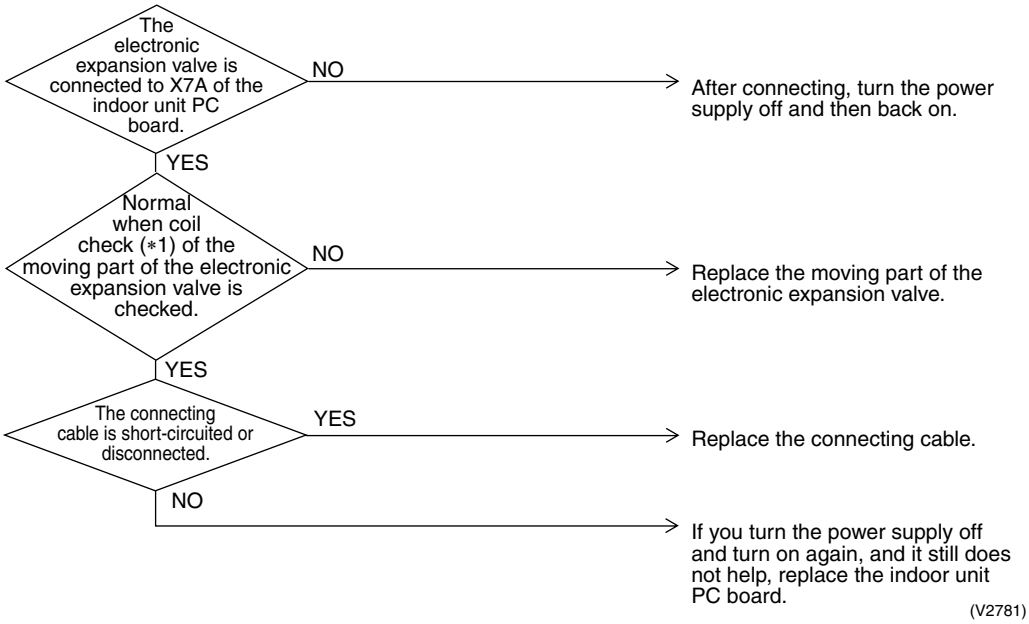

∗1: Coil check method for the moving part of the electronic expansion valve
Discount the electronic expansion valve from the PC board and check the continuity between the connector pins.

(Normal)

Pin No.	1. White	2. Yellow	3. Orange	4. Blue	5. Red	6. Brown
1. White		×	○ Approx. 300Ω	×	○ Approx. 150Ω	×
2. Yellow			×	○ Approx. 300Ω	×	○ Approx. 150Ω
3. Orange				×	○ Approx. 150Ω	×
4. Blue					×	○ Approx. 150Ω
5. Red						×
6. Brown						

○: Continuity
×: No continuity

3.8 "AF" Indoor Unit: Drain Level above Limit

Remote Control Display

AF

Applicable Models

FXCQ, FXSQ, FXKQ, FXMQ, FXDQ

Method of Malfunction Detection

Water leakage is detected based on float switch ON/OFF operation while the compressor is in non-operation.

Malfunction Decision Conditions

When the float switch changes from ON to OFF while the compressor is in non-operation.

Supposed Causes

- Humidifier unit (optional accessory) leaking
- Defect of drain pipe (upward slope, etc.)
- Defect of indoor unit PC board

Troubleshooting

Caution Be sure to turn off power switch before connect or disconnect connector, or parts damage may be occurred.

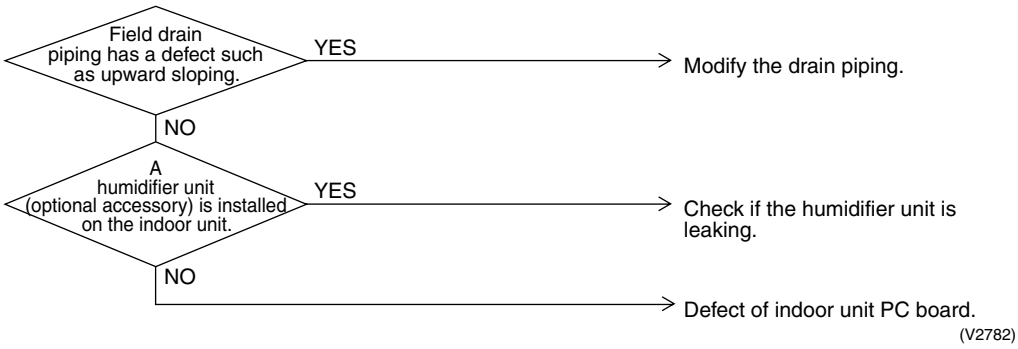

3.9 "AJ" Indoor Unit: Malfunction of Capacity Determination Device

Remote Control Display

AJ

Applicable Models

All indoor unit models

Method of Malfunction Detection

Capacity is determined according to resistance of the capacity setting adapter and the memory inside the IC memory on the indoor unit PC board, and whether the value is normal or abnormal is determined.

Malfunction Decision Conditions

Operation and:
1. When the capacity code is not contained in the PC board's memory, and the capacity setting adapter is not connected.
2. When a capacity that doesn't exist for that unit is set.

Supposed Causes

- You have forgotten to install the capacity setting adapter.
- Defect of indoor unit PC board

Troubleshooting

Caution Be sure to turn off power switch before connect or disconnect connector, or parts damage may be occurred.

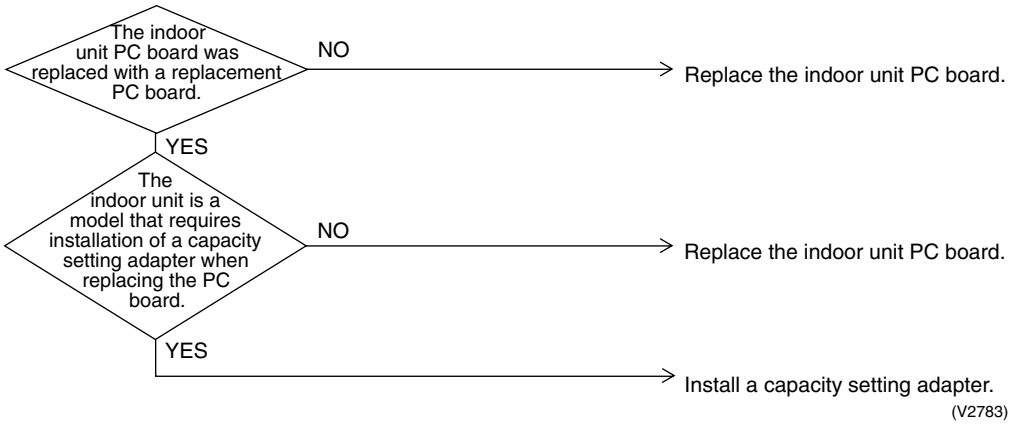

3.10 "C1" Indoor Unit: Failure of Transmission (Between Indoor unit PC Board and Fan PC Board)

Remote Control Display	C1
Applicable Models	FXMQ40~125P
Method of Malfunction Detecion	Check the condition of transmission between indoor PC board (A1P) and PC board for fan (A2P) using computer.
Malfunction Decision Conditions	When normal transmission is not conducted for certain duration.
Supposed Causes	■ Connection defect of the connecter between indoor PC board (A1P) and PC board for fan (A2P). ■ Malfunction of indoor PC board (A1P). ■ Malfunction of PC board for fan (A2P). ■ External factor, such as instantaneous blackout.

Troubleshooting

Caution Be sure to turn off power switch before connect or disconnect connector, or parts damage may be occurred.

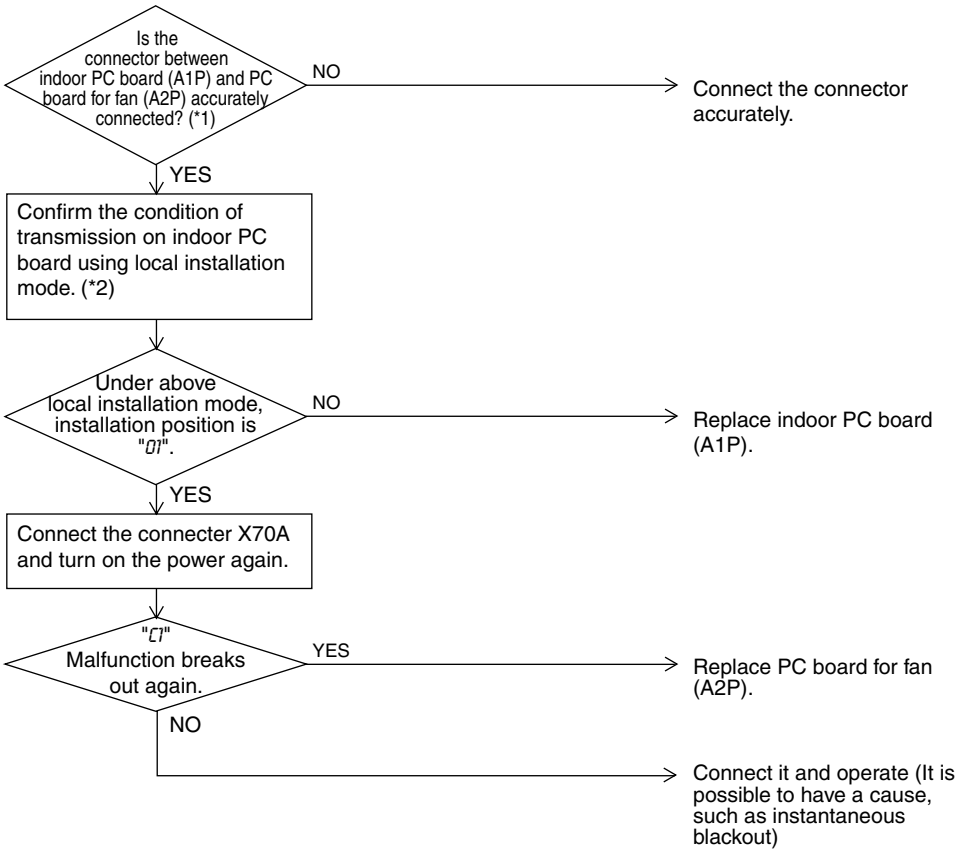

∗1. Pull out and insert the connecter once and check it is absolutely connected.

∗2. Method to check transmission part of indoor PC board.

① Turn off the power and remove the connecter X70A of indoor PC board (A1P).

② Short-circuit X70A.

③ After turning on the power, check below numbers under local setting remote control. (Confirmation: Setting position NO. at the condition of setting switch No. 21 on mode No. 41)

↓

Determination
- 01: Normal
- Other than 01: Transmission defect on indoor PC board

★ After confirmation, turn off the power, take off the short-circuit and connect X70A back to original condition.

3.11 "C4" Indoor Unit: Malfunction of Thermistor (R2T) for Heat Exchanger

Remote Control Display

C4

Applicable Models

All indoor unit models

Method of Malfunction Detection

Malfunction detection is carried out by temperature detected by heat exchanger thermistor.

Malfunction Decision Conditions

When the heat exchanger thermistor becomes disconnected or shorted while the unit is running.

Supposed Causes

- Defect of thermistor (R2T) for liquid pipe
- Defect of indoor unit PC board

Troubleshooting

Caution Be sure to turn off power switch before connect or disconnect connector, or parts damage may be occurred.

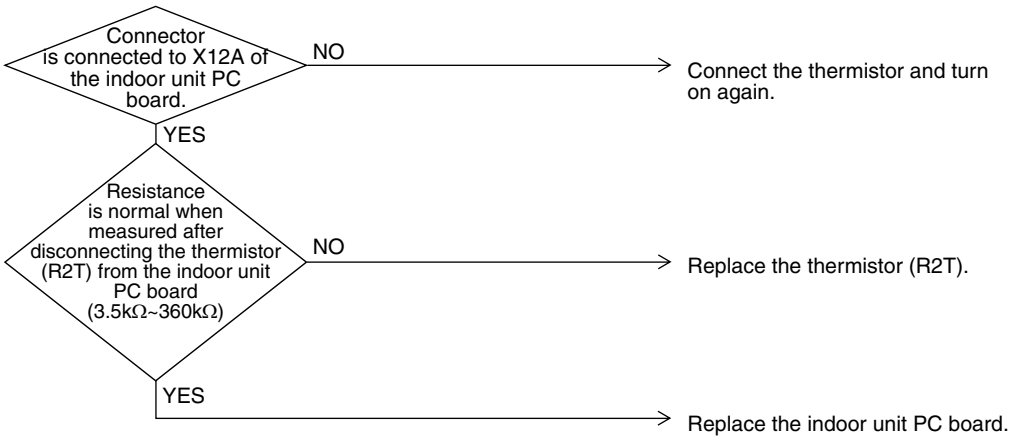

(V2784)

∗ Refer to thermistor resistance / temperature characteristics table on P251.

3.12 "C5" Indoor Unit: Malfunction of Thermistor (R3T) for Gas Pipes

Remote Control Display

C5

Applicable Models

All indoor unit models

Method of Malfunction Detection

Malfunction detection is carried out by temperature detected by gas pipe thermistor.

Malfunction Decision Conditions

When the gas pipe thermistor becomes disconnected or shorted while the unit is running.

Supposed Causes

- Defect of indoor unit thermistor (R3T) for gas pipe
- Defect of indoor unit PC board

Troubleshooting

Caution Be sure to turn off power switch before connect or disconnect connector, or parts damage may be occurred.

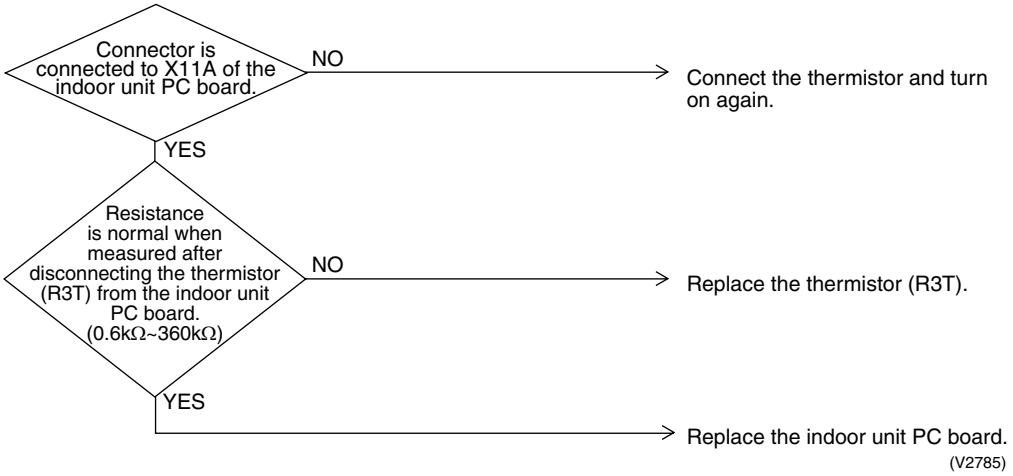

∗ Refer to thermistor resistance / temperature characteristics table on P251.

3.13 "C6" Indoor Unit: Failure of Combination (Between Indoor unit PC Board and Fan PC Board)

Remote Control Display

C6

Applicable Models

FXMQ40~125P

Method of Malfunction Detection

Conduct open line detection with PC board for fan (A2P) using indoor PC board (A1P).

Malfunction Decision Conditions

When the communication data of PC board for fan (A2P) is determined as incorrect.

Supposed Causes

The possible causes are:

- Malfunction of PC board for fan (A2P).
- Connection defect of capacity setting adapter.
- Setting mistake on site.

Troubleshooting

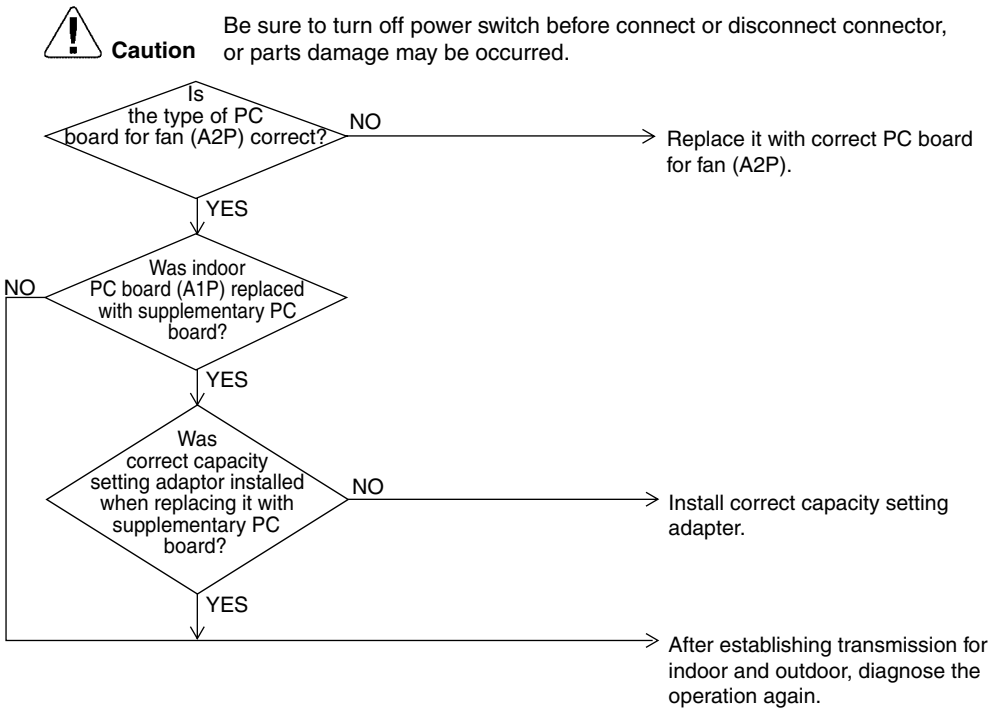

3.14 "C9" Indoor Unit: Malfunction of Thermistor (R1T) for Suction Air

Remote Control Display

C9

Applicable Models

All indoor unit models

Method of Malfunction Detection

Malfunction detection is carried out by temperature detected by suction air temperature thermistor.

Malfunction Decision Conditions

When the suction air temperature thermistor becomes disconnected or shorted while the unit is running.

Supposed Causes

- Defect of indoor unit thermistor (R1T) for air inlet
- Defect of indoor unit PC board

Troubleshooting

Caution Be sure to turn off power switch before connect or disconnect connector, or parts damage may be occurred.

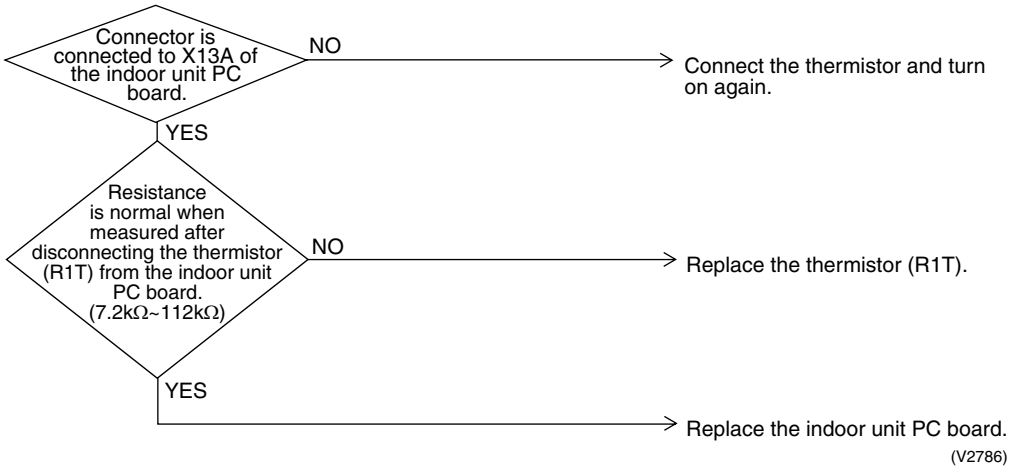

∗ Refer to thermistor resistance / temperature characteristics table on P251.

3.15 "CA" Indoor Unit: Malfunction of Thermistor for Discharge Air

Remote Control Display

CA

Applicable Models

All indoor unit models

Method of Malfunction Detection

Malfunction detection is carried out by temperature detected by discharge air temperature thermistor.

Malfunction Decision Conditions

When the discharge air temperature thermistor becomes disconnected or shorted while the unit is running.

Supposed Causes

- Defect of indoor unit thermistor for air outlet
- Defect of indoor unit PC board

Troubleshooting

Caution Be sure to turn off power switch before connect or disconnect connector, or parts damage may be occurred.

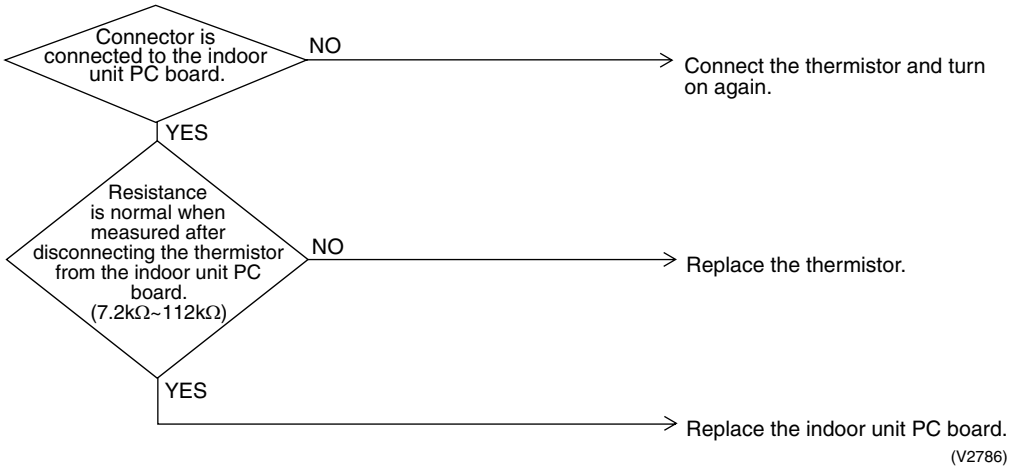

∗ Refer to thermistor resistance / temperature characteristics table on P251.

3.16 "CC" Indoor Unit: Malfunction of Humidity Sensor System

Remote Control Display

CC

Applicable Models

FXFQ

Method of Malfunction Detection

Even if a malfunction occurs, operation still continues.
Malfunction is detected according to the moisture (output voltage) detected by the moisture sensor.

Malfunction Decision Conditions

When the moisture sensor is disconnected or short-circuited

Supposed Causes

- Faulty sensor
- Disconnection

Troubleshooting

Caution Be sure to turn off power switch before connect or disconnect connector, or parts damage may be occurred.

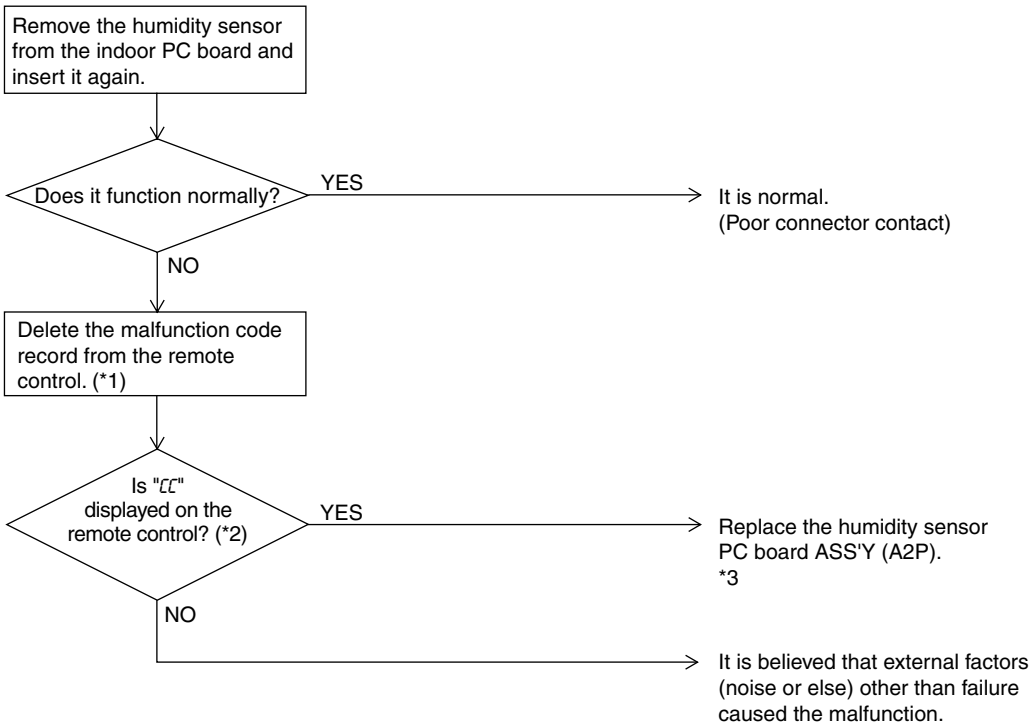

*1: To delete the record, the ON/OFF button of the remote control must be pushed and held for 5 seconds in the check mode.
*2: To display the code, the Inspection/Test Operation button of the remote control must be pushed and held in the normal mode.
*3: If "CC" is displayed even after replacing the humidity sensor PC board ASS'Y (A2P) and taking the steps *1 and 2, replace the indoor PC board ASS'Y (A1P).

3.17 "CJ" Indoor Unit: Malfunction of Thermostat Sensor in Remote Control

Remote Control Display

CJ

Applicable Models

All indoor unit models

Method of Malfunction Detection

Malfunction detection is carried out by temperature detected by remote control air temperature thermistor. (Note1)

Malfunction Decision Conditions

When the remote control air temperature thermistor becomes disconnected or shorted while the unit is running.

Supposed Causes

- Defect of remote control thermistor
- Defect of remote control PC board

Troubleshooting

Caution Be sure to turn off power switch before connect or disconnect connector, or parts damage may be occurred.

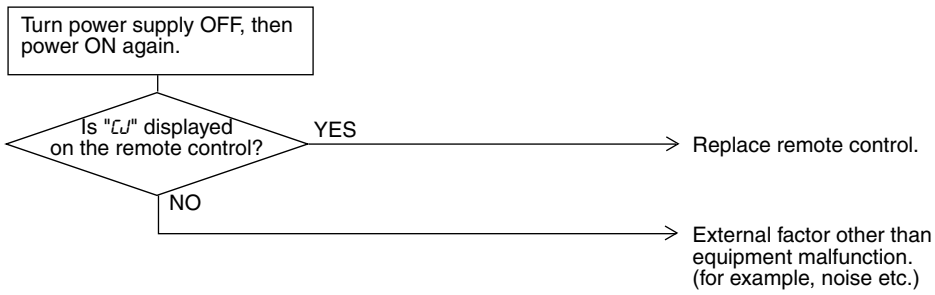

(V2787)

Note: In case of remote control thermistor malfunction, unit is still operable by suction air thermistor on indoor unit.

∗ Refer to thermistor resistance / temperature characteristics table on P251.

3.18 "E1" Outdoor Unit: PC Board Defect

Remote Control Display

E1

Applicable Models

RXYSQ4~6PA

Method of Malfunction Detection

Check data from E²PROM

Malfunction Decision Conditions

When data could not be correctly received from the E²PROM
E²PROM : Type of nonvolatile memory. Maintains memory contents even when the power supply is turned off.

Supposed Causes

- Defect of outdoor unit PC board (A1P)

Troubleshooting

Caution Be sure to turn off power switch before connect or disconnect connector, or parts damage may be occurred.

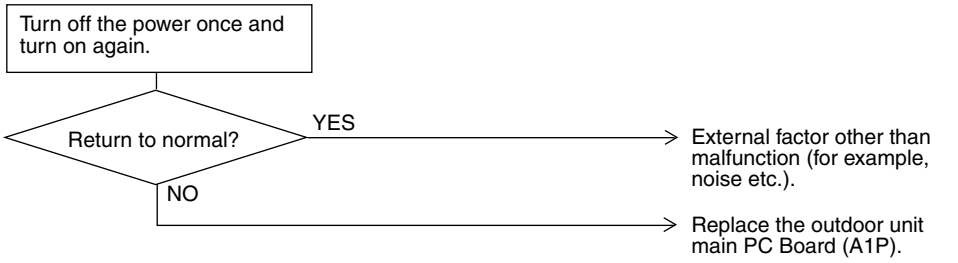

(V3064)

3.19 "E3" Outdoor Unit: Actuation of High Pressure Switch

Remote Control Display	E3
Applicable Models	RXYSQ4~6PA
Method of Malfunction Detection	Abnormality is detected when the contact of the high pressure protection switch opens.
Malfunction Decision Conditions	Error is generated when the HPS activation count reaches the number specific to the operation mode. (Reference) Operating pressure of high pressure switch Operating pressure: 4.0MPa Reset pressure: 3.0MPa
Supposed Causes	■ Actuation of outdoor unit high pressure switch ■ Defect of High pressure switch ■ Defect of outdoor unit PC board (A1P) ■ Instantaneous power failure ■ Faulty high pressure sensor

Troubleshooting

Caution Be sure to turn off power switch before connect or disconnect connector, or parts damage may be occurred.

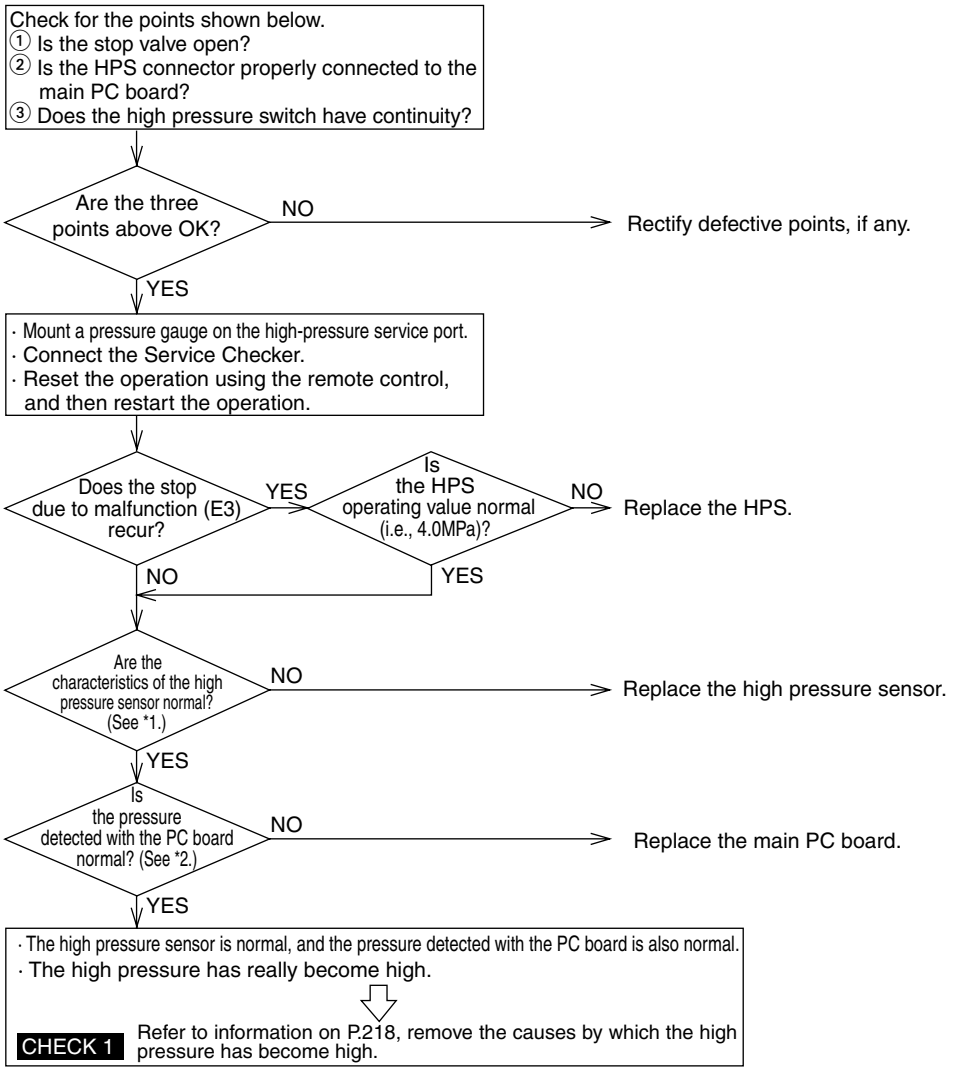

*1: Make a comparison between the voltage of the pressure sensor (*4) and that read by the pressure gauge.
(As to the voltage of the pressure sensor, make measurement of voltage at the connector, and then convert it to pressure according to information on P.253.)

*2: Make a comparison between the high pressure value checked with the Service Checker and the voltage of the pressure sensor (see *1).

*3: Make measurement of voltage of the pressure sensor.

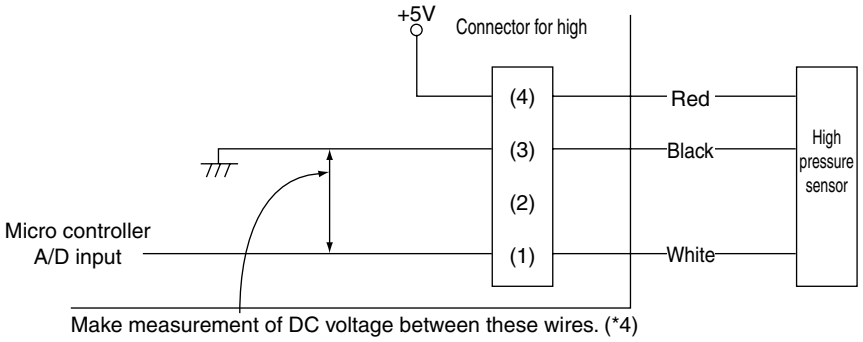

3.20 "E4" Outdoor Unit: Actuation of Low Pressure Sensor

Remote Control Display	E4
Applicable Models	RXYSQ4~6PA
Method of Malfunction Detection	Abnormality is detected by the pressure value with the low pressure sensor.
Malfunction Decision Conditions	Error is generated when the low pressure is dropped under specific pressure. Operating pressure:0.07MPa
Supposed Causes	■ Abnormal drop of low pressure (Lower than 0.07MPa) ■ Defect of low pressure sensor ■ Defect of outdoor unit PC board (A1P) ■ Stop valve is not opened.

Troubleshooting

Caution Be sure to turn off power switch before connect or disconnect connector, or parts damage may be occurred.

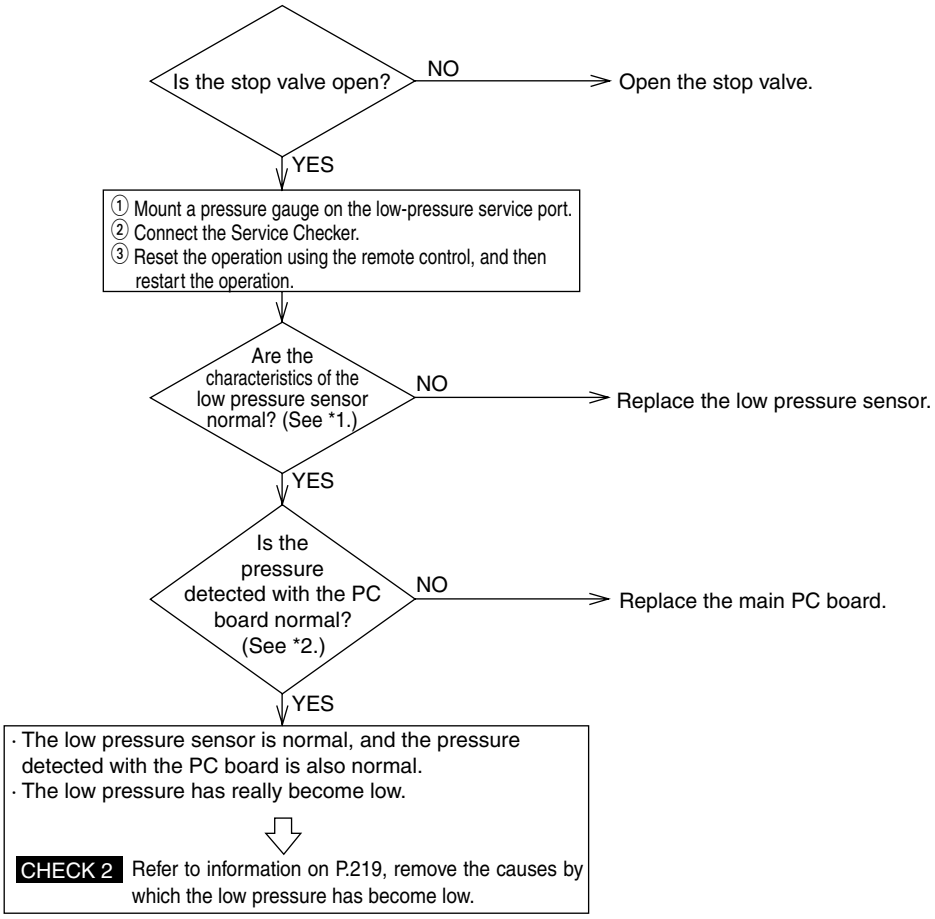

*1: Make a comparison between the voltage of the pressure sensor (*4) and that read by the pressure gauge.
(As to the voltage of the pressure sensor, make measurement of voltage at the connector, and then convert it to pressure according to information on P.253.)

*2: Make a comparison between the low pressure value checked with the Service Checker and the voltage of the pressure sensor (see *1).

*3: Make measurement of voltage of the pressure sensor.

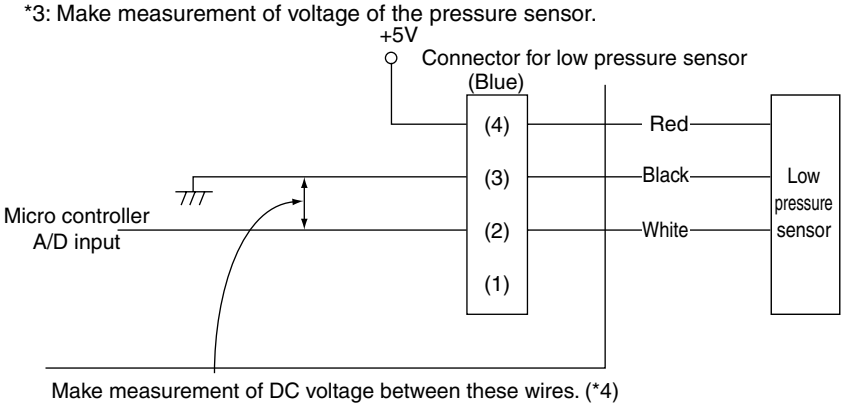

3.21 "E5" Inverter Compressor Motor Lock

Remote Control Display

E5

Applicable Models

RXYSQ4~6PA

Method of Malfunction Detection

Inverter PC board takes the position signal from UVW line connected between the inverter and compressor, and the malfunction is detected when any abnormality is observed in the phase-current waveform.

Malfunction Decision Conditions

This malfunction will be output when the inverter compressor motor does not start up even in forced startup mode.

Supposed Causes

- Compressor lock
- High differential pressure (0.5MPa or more)
- Incorrect UVW wiring
- Faulty inverter PC board
- Stop valve is left in closed.

Troubleshooting

Caution Be sure to turn off power switch before connect or disconnect connector, or parts damage may be occurred.

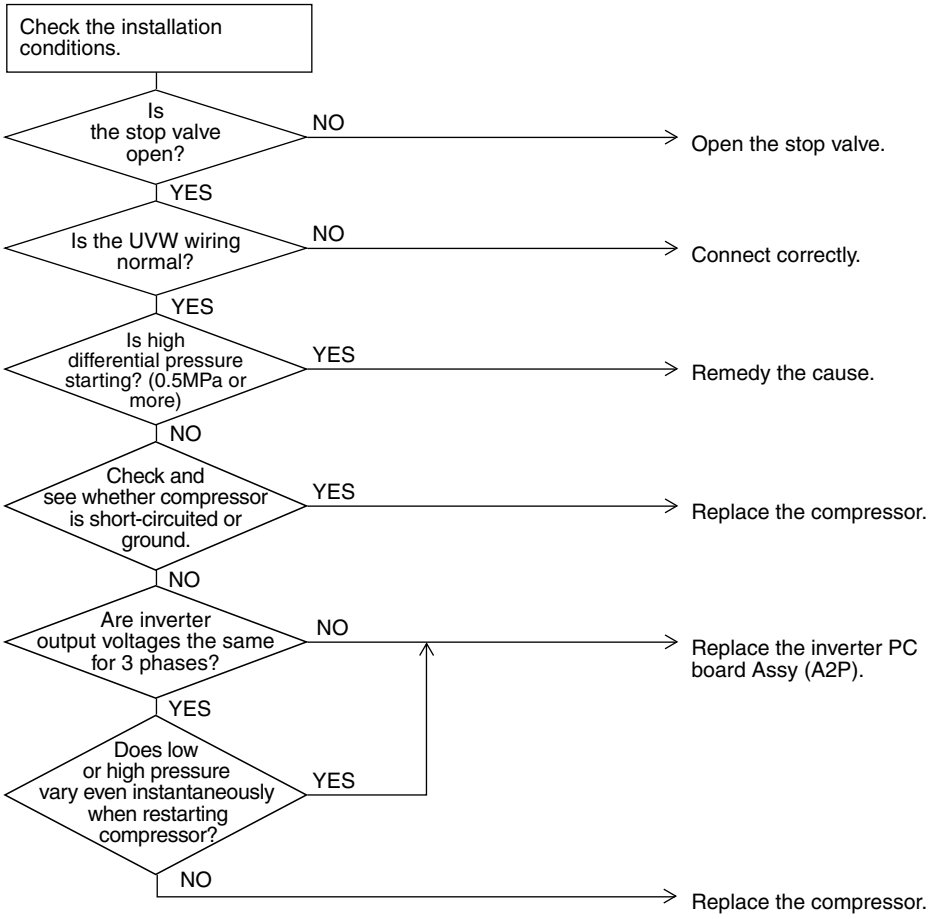

(V2793)

3.22 "E7" Malfunction of Outdoor Unit Fan Motor

Remote Control Display

E7

Applicable Models

RXYSQ4~6PA

Method of Malfunction Detection

Malfunction of fan motor system is detected according to the fan speed detected by hall IC when the fan motor runs.

Malfunction Decision Conditions

- When the fan runs with speed less than a specified one for 6 seconds or more when the fan motor running conditions are met
- When malfunction is generated 4 times, the system shuts down.

Supposed Causes

- Malfunction of fan motor
- The harness connector between fan motor and PC board is left in disconnected, or faulty connector
- Fan does not run due to foreign matters tangled
- Clearing condition: Operate for 5 minutes (normal)
- Open phase L1 or open phase N.

Troubleshooting

Caution Be sure to turn off power switch before connect or disconnect connector, or parts damage may be occurred.

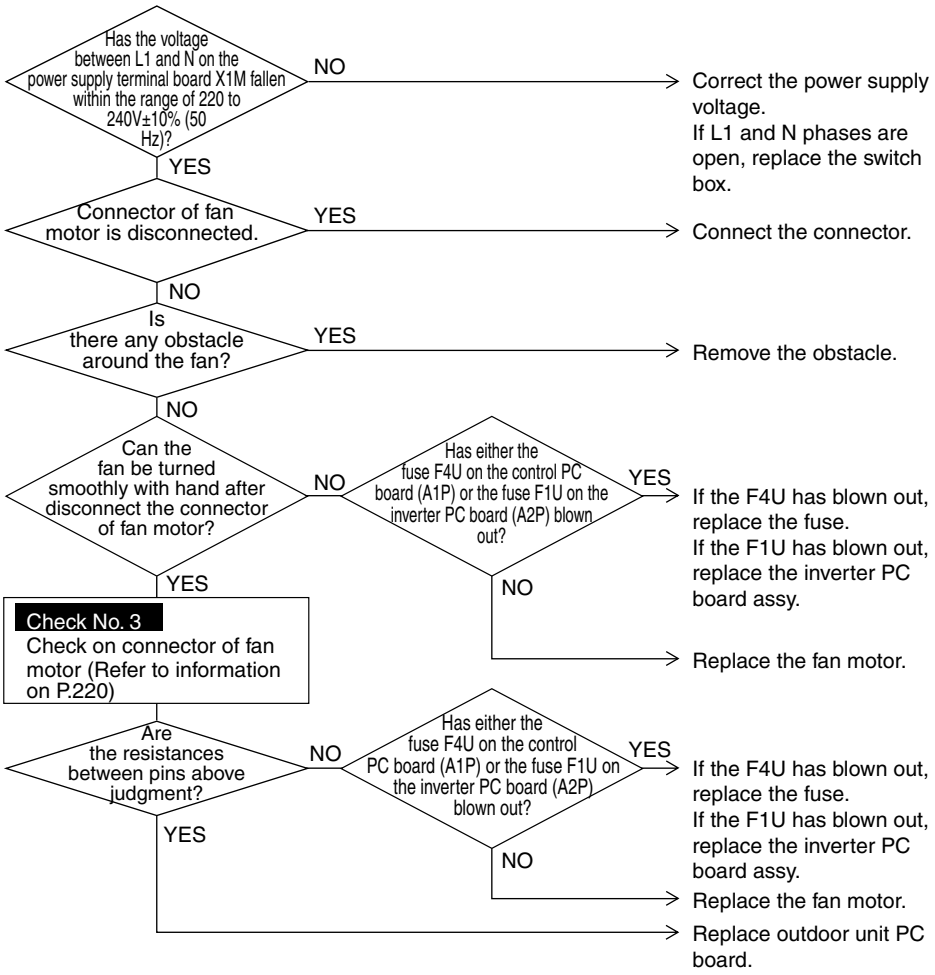

3.23 "E9" Outdoor Unit: Malfunction of Moving Part of Electronic Expansion Valve (Y1E, Y3E)

Remote Control Display	E9
Applicable Models	RXYSQ4~6PA
Method of Malfunction Detection	Check disconnection of connector Check continuity of expansion valve coil
Malfunction Decision Conditions	Error is generated under no common power supply when the power is on.
Supposed Causes	■ Defect of moving part of electronic expansion valve ■ Defect of outdoor unit PC board (A1P) ■ Defect of connecting cable

Troubleshooting

Caution Be sure to turn off power switch before connect or disconnect connector, or parts damage may be occurred.

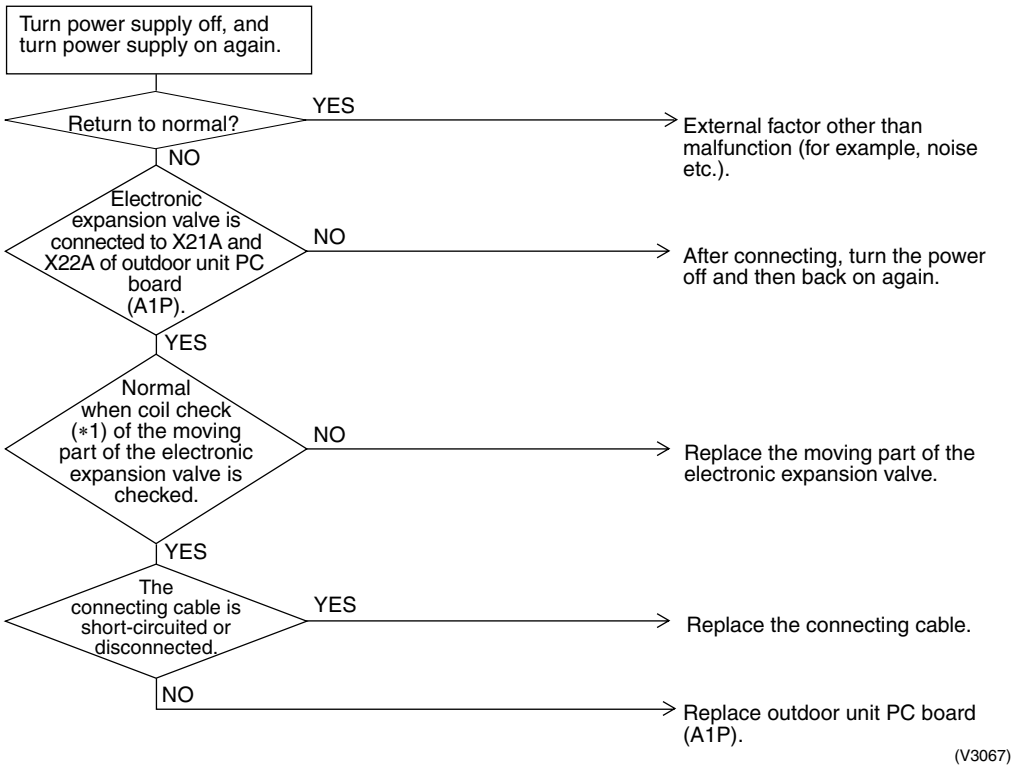

∗Make measurement of resistance between the connector pins, and then make sure the resistance falls in the range of 40 to 50Ω.

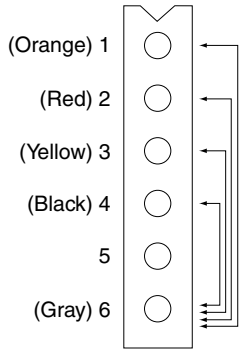

Measuring points
1 - 6
2 - 6
3 - 6
4 - 6

(V3067)

3.24 "F3" Outdoor Unit: Abnormal Discharge Pipe Temperature

Remote Control Display

F3

Applicable Models

RXYSQ4~6PA

Method of Malfunction Detection

Abnormality is detected according to the temperature detected by the discharge pipe temperature sensor.

Malfunction Decision Conditions

When the discharge pipe temperature rises to an abnormally high level
When the discharge pipe temperature rises suddenly

Supposed Causes

- Faulty discharge pipe temperature sensor
- Faulty connection of discharge pipe temperature sensor
- Faulty outdoor unit PC board

Troubleshooting

Caution Be sure to turn off power switch before connect or disconnect connector, or parts damage may be occurred.

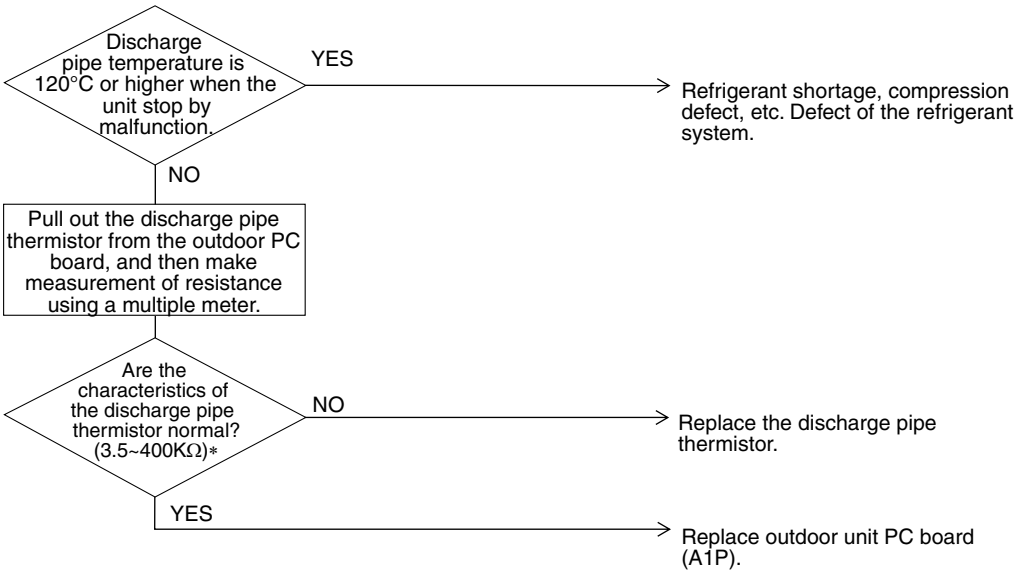

* Refer to "Thermistor Resistance / Temperature Characteristics" table on P252.

3.25 "F6" Outdoor Unit: Refrigerant Overcharged

Remote Control Display

F6

Applicable Models

RXYSQ4~6PA

Method of Malfunction Detection

Excessive charging of refrigerant is detected by using the heat exchanging deicer temperature during a check operation.

Malfunction Decision Conditions

When the amount of refrigerant, which is calculated by using the heat exchanging deicer temperature during a check run, exceeds the standard.

Supposed Causes

- Refrigerant overcharge
- Misalignment of the thermistor for heat exchanger
- Defect of the thermistor for heat exchanger

Troubleshooting

Caution Be sure to turn off power switch before connect or disconnect connector, or parts damage may be occurred.

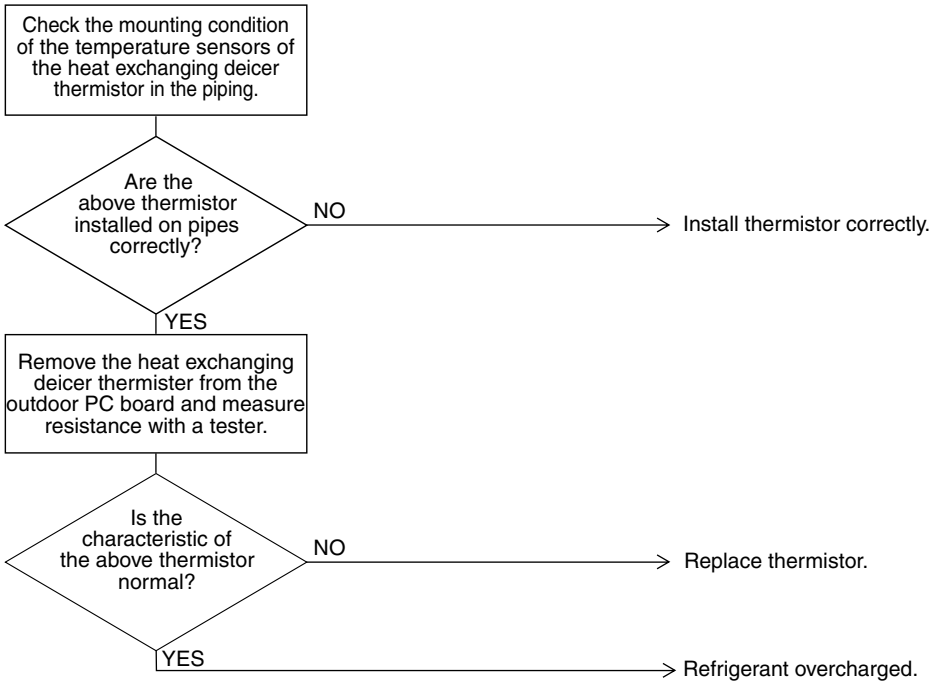

(V2797)

∗ Refer to "Thermistor Resistance / Temperature Characteristics" table on P251.

3.26 "H9" Outdoor Unit: Malfunction of Thermistor (R1T) for Outdoor Air

Remote Control Display

H9

Applicable Models

RXYSQ4~6PA

Method of Malfunction Detection

Malfunction is detected from the temperature detected by the outdoor air thermistor.

Malfunction Decision Conditions

When the outside air temperature thermistor has short circuit or open circuit.

Supposed Causes

- Defect of thermistor (R1T) for outdoor air
- Defect of outdoor unit PC board (A1P)

Troubleshooting

Caution Be sure to turn off power switch before connect or disconnect connector, or parts damage may be occurred.

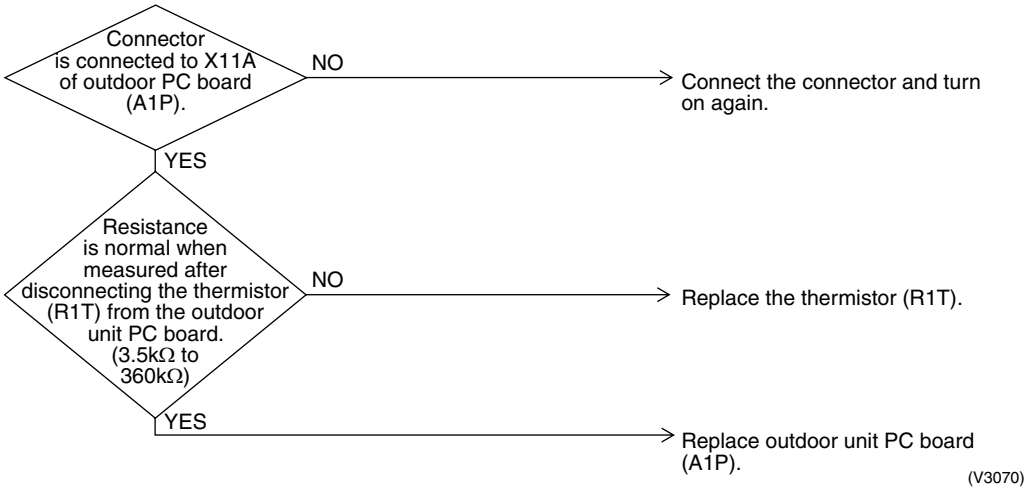

∗ Refer to "Thermistor Resistance / Temperature Characteristics" table on P251.

3.27 "J3" Outdoor Unit: Malfunction of Discharge Pipe Thermistor (R2T)

Remote Control Display

J3

Applicable Models

RXYSQ4~6PA

Method of Malfunction Detection

Malfunction is detected from the temperature detected by discharge pipe temperature thermistor.

Malfunction Decision Conditions

When a short circuit or an open circuit in the discharge pipe temperature thermistor is detected.

Supposed Causes

- Defect of thermistor (R2T) for outdoor unit discharge pipe
- Defect of outdoor unit PC board (A1P)

Troubleshooting

Caution Be sure to turn off power switch before connect or disconnect connector, or parts damage may be occurred.

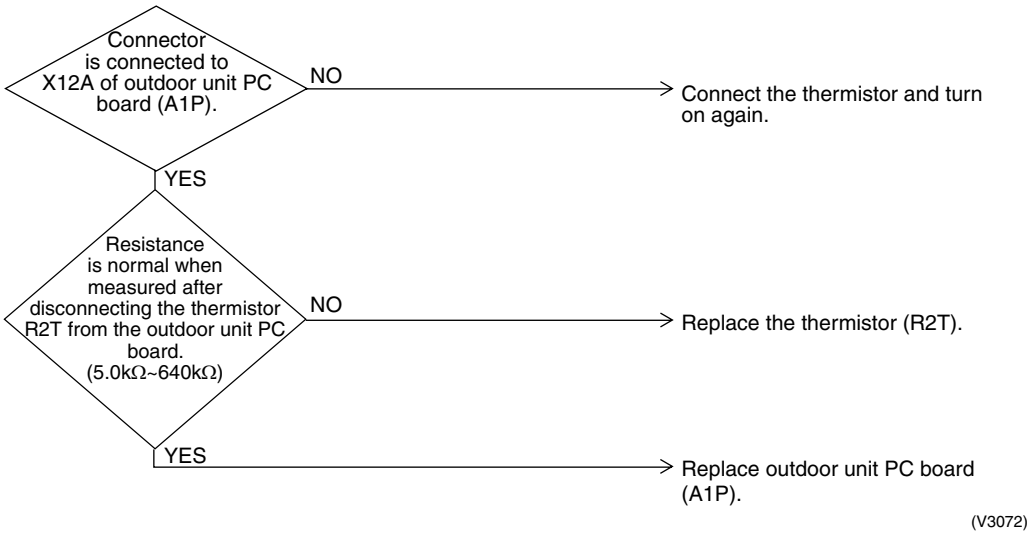

∗ Refer to thermistor resistance / temperature characteristics table on P252.

3.28 "J5" Outdoor Unit: Malfunction of Thermistor (R3T, R5T) for Suction Pipe 1, 2

Remote Control Display

J5

Applicable Models

RXYSQ4~6PA

Method of Malfunction Detection

Malfunction is detected from the temperature detected by the thermistor for suction pipe 1, 2.

Malfunction Decision Conditions

When a short circuit or an open circuit in the thermistor for suction pipe 1, 2 are detected.

Supposed Causes

- Defect of thermistor (R3T, R5T) for outdoor unit suction pipe
- Defect of outdoor unit PC board (A1P)

Troubleshooting

Caution Be sure to turn off power switch before connect or disconnect connector, or parts damage may be occurred.

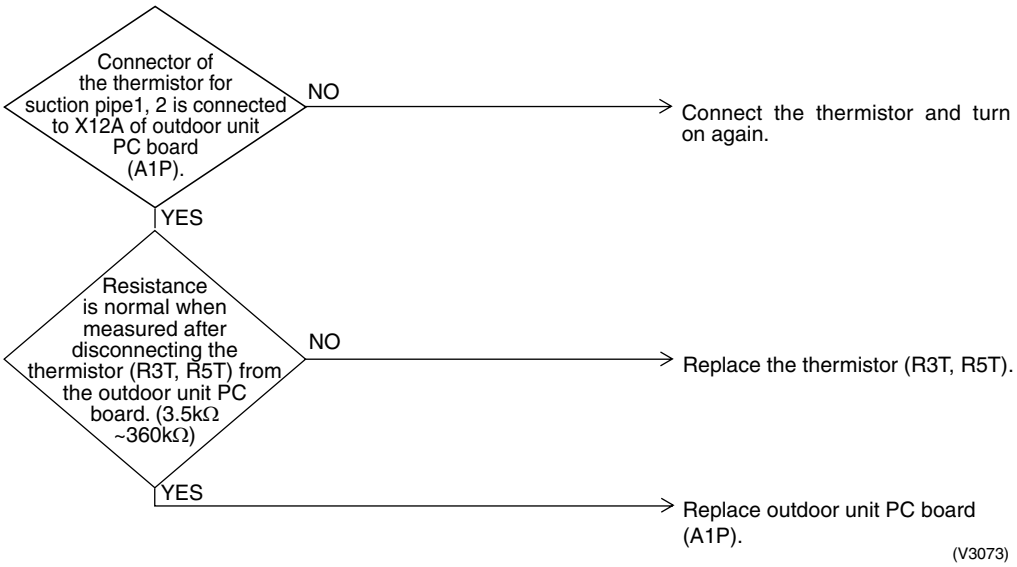

∗ Refer to thermistor resistance / temperature characteristics table on P251.

3.29 "J6" Outdoor Unit: Malfunction of Thermistor (R6T)

Remote Control Display

J6

Applicable Models

RXYSQ4~6PA

Method of Malfunction Detection

Malfunction is detected from the temperature detected by the heat exchanger thermistor.

Malfunction Decision Conditions

When a short circuit or an open circuit in the heat exchange thermistor is detected.

Supposed Causes

- Defect of thermistor (R6T) for outdoor unit heat exchanger
- Defect of outdoor unit PC board (A1P)

Troubleshooting

Caution Be sure to turn off power switch before connect or disconnect connector, or parts damage may be occurred.

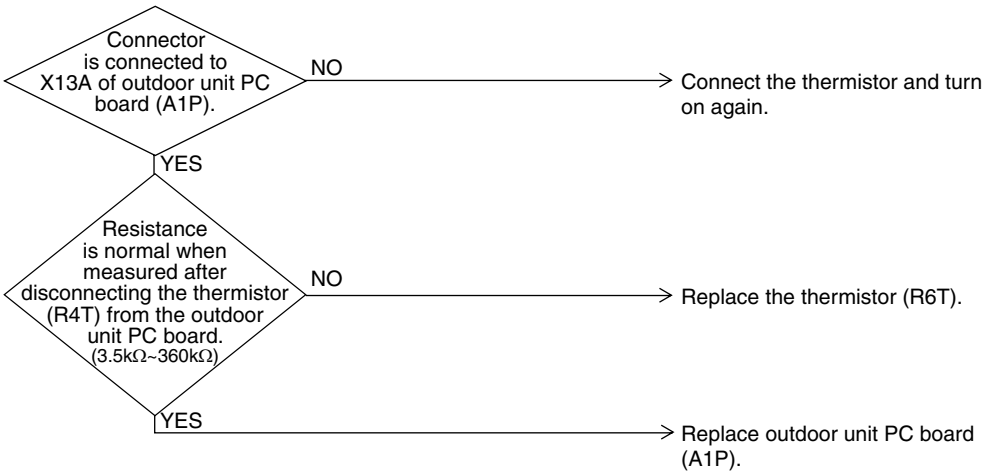

(V3074)

∗ Refer to thermistor resistance / temperature characteristics table on P251.

3.30 "J7" Outdoor Unit: Malfunction of Thermistor (R7T) for Outdoor Unit Liquid Pipe

Remote Control Display

J7

Applicable Models

RXYSQ4~6PA

Method of Malfunction Detection

Malfunction is detected from the temperature detected by the liquid pipe thermistor.

Malfunction Decision Conditions

When a short circuit or an open circuit in the heat exchange thermistor is detected.

Supposed Causes

- Defect of thermistor (R7T) for outdoor unit liquid pipe
- Defect of outdoor unit PC board (A1P)

Troubleshooting

Caution Be sure to turn off power switch before connect or disconnect connector, or parts damage may be occurred.

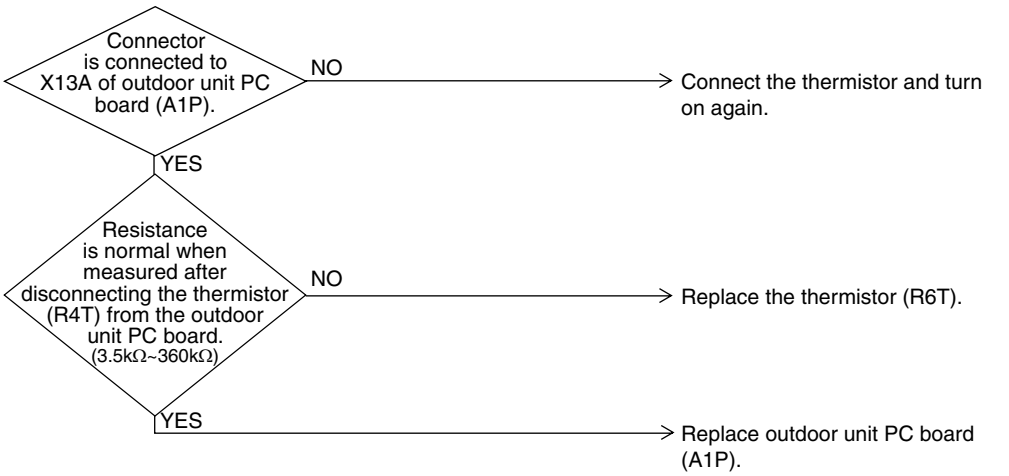

(V3074)

∗ Refer to thermistor resistance / temperature characteristics table on P251.

3.31 "J9" Outdoor Unit: Malfunction of Thermistor (R4T)

Remote Control Display

J9

Applicable Models

RXYSQ4~6PA

Method of Malfunction Detection

Malfunction is detected according to the temperature detected by subcooling heat exchanger gas pipe thermistor.

Malfunction Decision Conditions

When the subcooling heat exchanger gas pipe thermistor is short circuited or open.

Supposed Causes

- Faulty subcooling heat exchanger gas pipe thermistor (R4T)
- Faulty outdoor unit PC board

Troubleshooting

Caution Be sure to turn off power switch before connect or disconnect connector, or parts damage may be occurred.

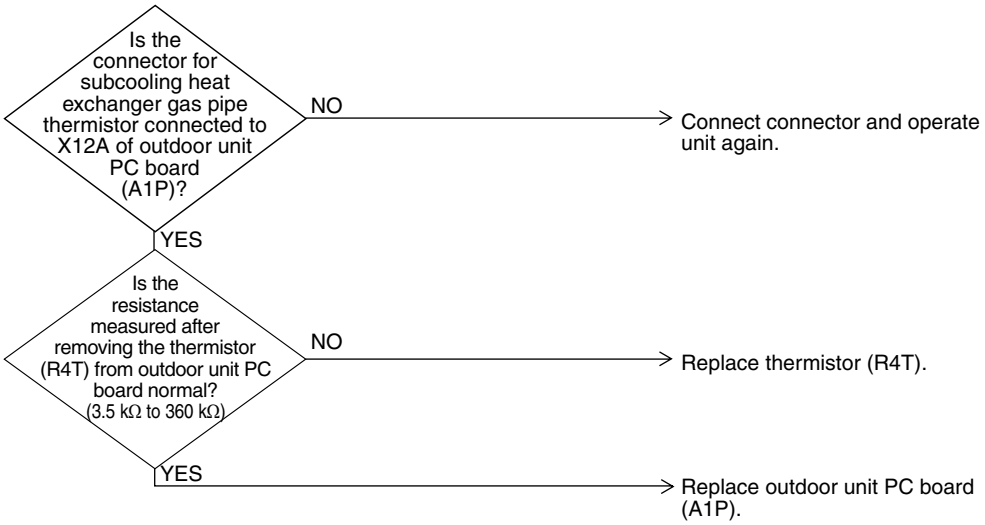

(V3075)

∗ Refer to "Thermistor Resistance / Temperature Characteristics" table on P251.

3.32 "JA" Outdoor Unit: Malfunction of High Pressure Sensor

Remote Control Display

JA

Applicable Models

RXYSQ4~6PA

Method of Malfunction Detection

Malfunction is detected from the pressure detected by the high pressure sensor.

Malfunction Decision Conditions

When the high pressure sensor is short circuit or open circuit.

Supposed Causes

- Defect of high pressure sensor
- Connection of low pressure sensor with wrong connection.
- Defect of outdoor unit PC board.

Troubleshooting

Caution Be sure to turn off power switch before connect or disconnect connector, or parts damage may be occurred.

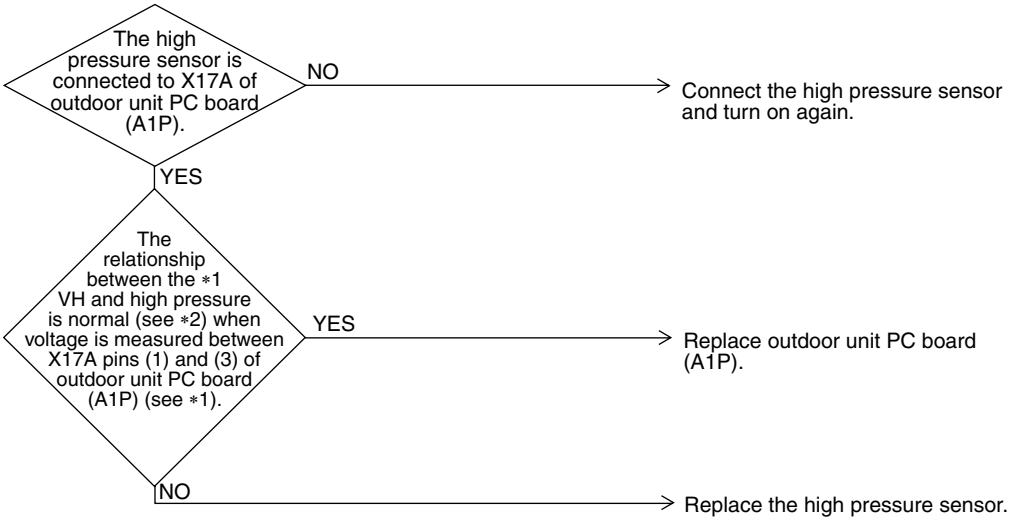

(V2806)

∗1: Voltage measurement point

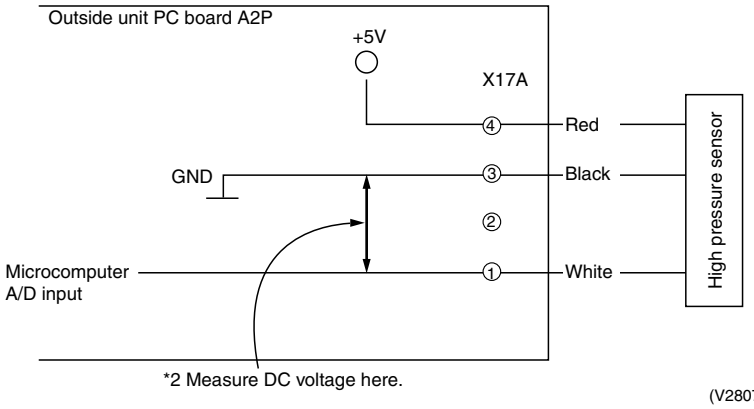

(V2807)

∗2: Refer to "Pressure Sensor", pressure / voltage characteristics table on P253.

3.33 "JC" Outdoor Unit: Malfunction of Low Pressure Sensor

Remote Control Display

JC

Applicable Models

RXYSQ4~6PA

Method of Malfunction Detection

Malfunction is detected from pressure detected by low pressure sensor.

Malfunction Decision Conditions

When the low pressure sensor is short circuit or open circuit.

Supposed Causes

- Defect of low pressure sensor
- Connection of high pressure sensor with wrong connection.
- Defect of outdoor unit PC board.

Troubleshooting

Caution Be sure to turn off power switch before connect or disconnect connector, or parts damage may be occurred.

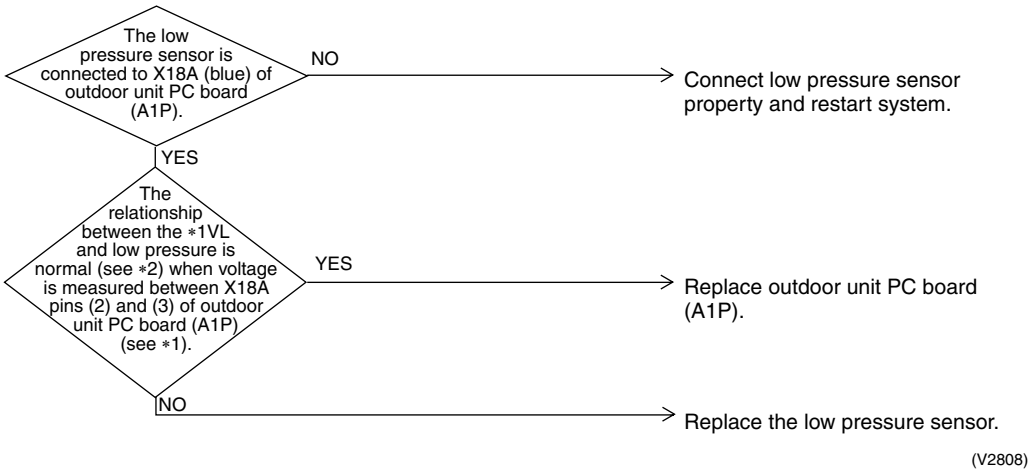

∗1: Voltage measurement point

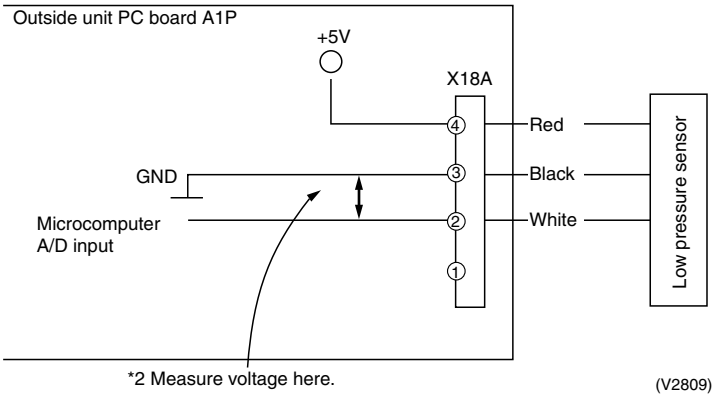

∗2: Refer to "Pressure Sensor", pressure/voltage characteristics table on P253.

3.34 "L1" Outdoor Unit: Malfunction of PC Board

Remote Control Display

L1

Applicable Models

RXYSQ4~6PA

Method of Malfunction Detection

- Detect malfunctions by current value during waveform output before compressor startup.
- Detect malfunctions by current sensor value during synchronized operation at the time of startup.

Malfunction Decision Conditions

- In case of overcurrent (OCP) during waveform output
- When the current sensor malfunctions during synchronized operation
- In case of IGBT malfunction

Supposed Causes

- Faulty outdoor PC board (A1P)
  - IPM failure
  - Current sensor failure
  - Failure of IGBT or drive circuit

Troubleshooting

Caution Be sure to turn off power switch before connect or disconnect connector, or parts damage may be occurred.

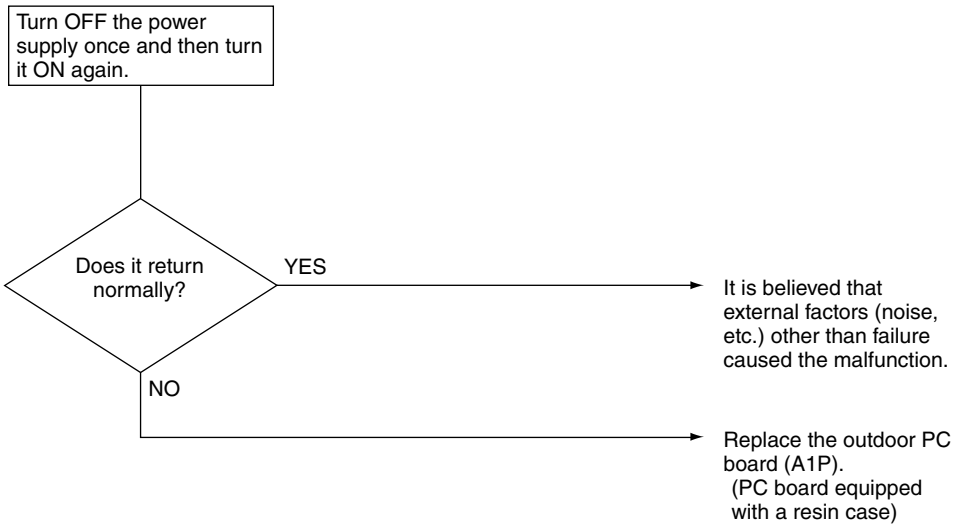

3.35 "L4" Outdoor Unit: Malfunction of Inverter Radiating Fin Temperature Rise

Remote Control Display

L4

Applicable Models

RXYSQ4~6PA

Method of Malfunction Detection

Fin temperature is detected by the thermistor of the radiation fin.

Malfunction Decision Conditions

When the temperature of the inverter radiation fin increases above 83°C.

Supposed Causes

- Actuation of fin thermal (Actuates above 83°C)
- Defect of inverter PC board (A2P)
- Defect of fin thermistor

Troubleshooting

Caution Be sure to turn off power switch before connect or disconnect connector, or parts damage may be occurred.

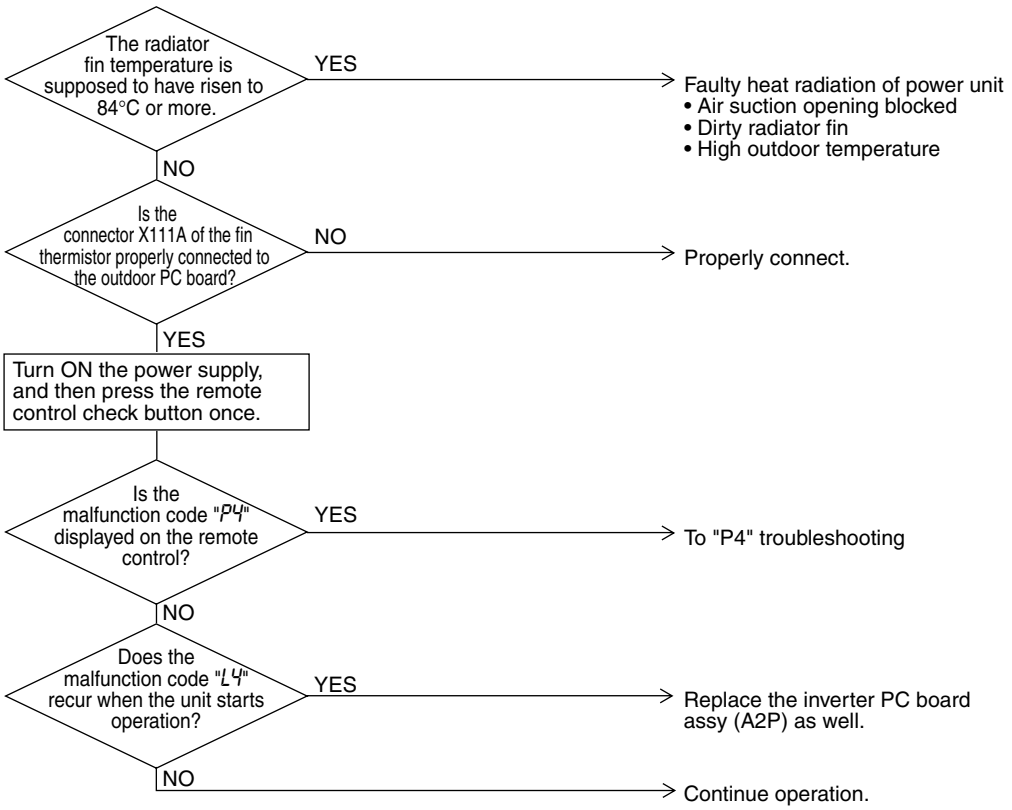

3.36 "L5" Outdoor Unit: Inverter Compressor Abnormal

Remote Control Display

L5

Applicable Models

RXYSQ4~6PA

Method of Malfunction Detection

Malfunction is detected from current flowing in the power transistor.

Malfunction Decision Conditions

When an excessive current flows in the power transistor.
(Instantaneous overcurrent also causes activation.)

Supposed Causes

- Defect of compressor coil (disconnected, defective insulation)
- Compressor start-up malfunction (mechanical lock)
- Defect of inverter PC board (A2P)

Troubleshooting

Caution Be sure to turn off power switch before connect or disconnect connector, or parts damage may be occurred.

Compressor inspection

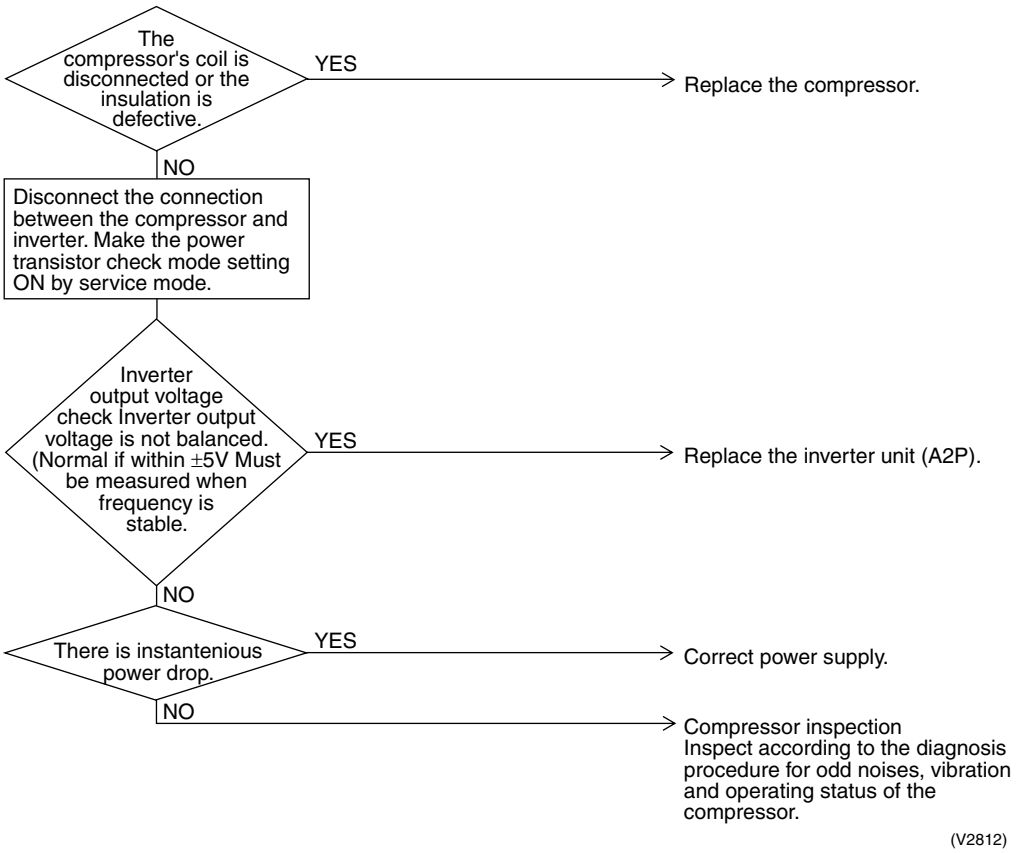

(V2812)

Higher voltage than actual is displayed when the inverter output voltage is checked by tester.

3.37 "L8" Outdoor Unit: Inverter Current Abnormal

Remote Control Display

L8

Applicable Models

RXYSQ4~6PA

Method of Malfunction Detection

Malfunction is detected by current flowing in the power transistor.

Malfunction Decision Conditions

When overload in the compressor is detected.

Supposed Causes

- Compressor overload
- Compressor coil disconnected
- Defect of outdoor unit PC board (A2P)

Troubleshooting

Caution Be sure to turn off power switch before connect or disconnect connector, or parts damage may be occurred.

Output current check

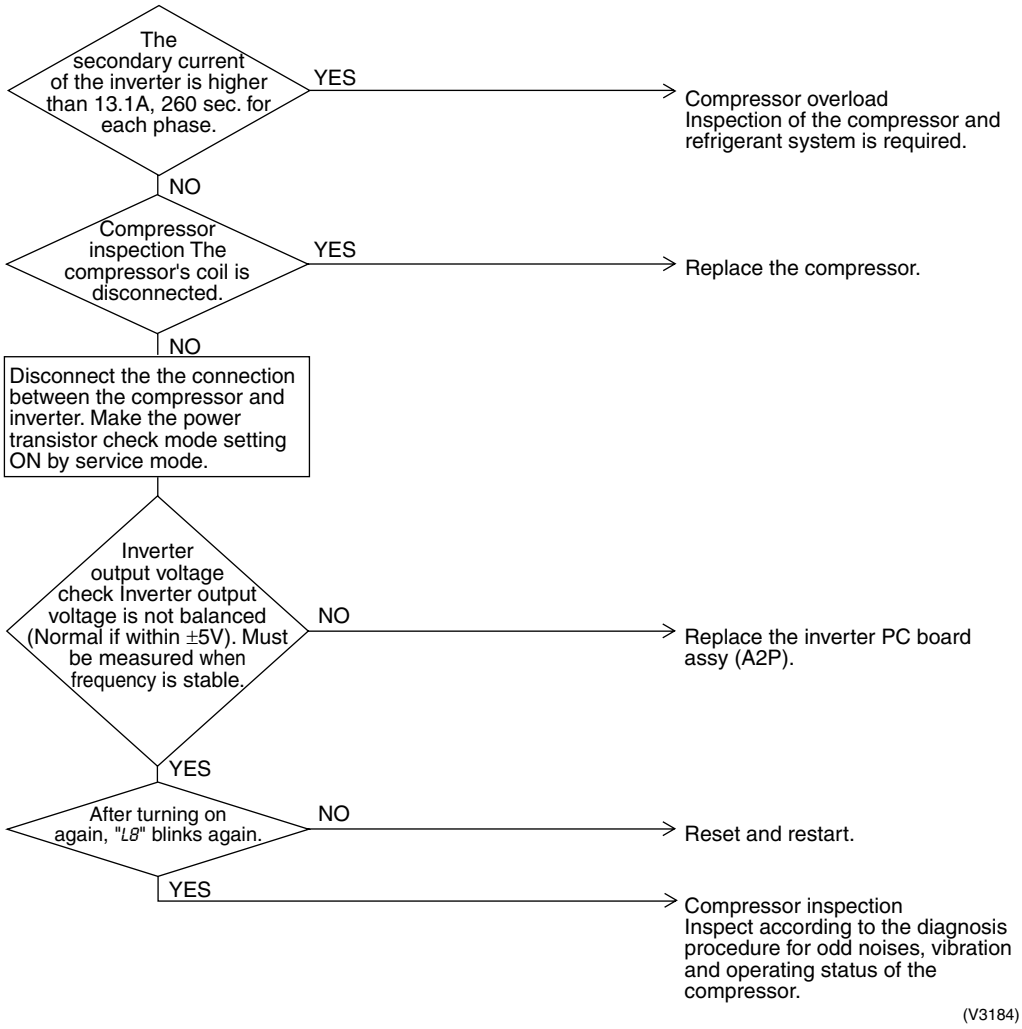

3.38 "L9" Outdoor Unit: Inverter Start up Error

Remote Control Display

L9

Applicable Models

RXYSQ4~6PA

Method of Malfunction Detection

Malfunction is detected from current flowing in the power transistor.

Malfunction Decision Conditions

When overload in the compressor is detected during startup

Supposed Causes

- Defect of compressor
- Pressure differential start
- Defect of outdoor unit PC board (A2P)

Troubleshooting

Caution Be sure to turn off power switch before connect or disconnect connector, or parts damage may be occurred.

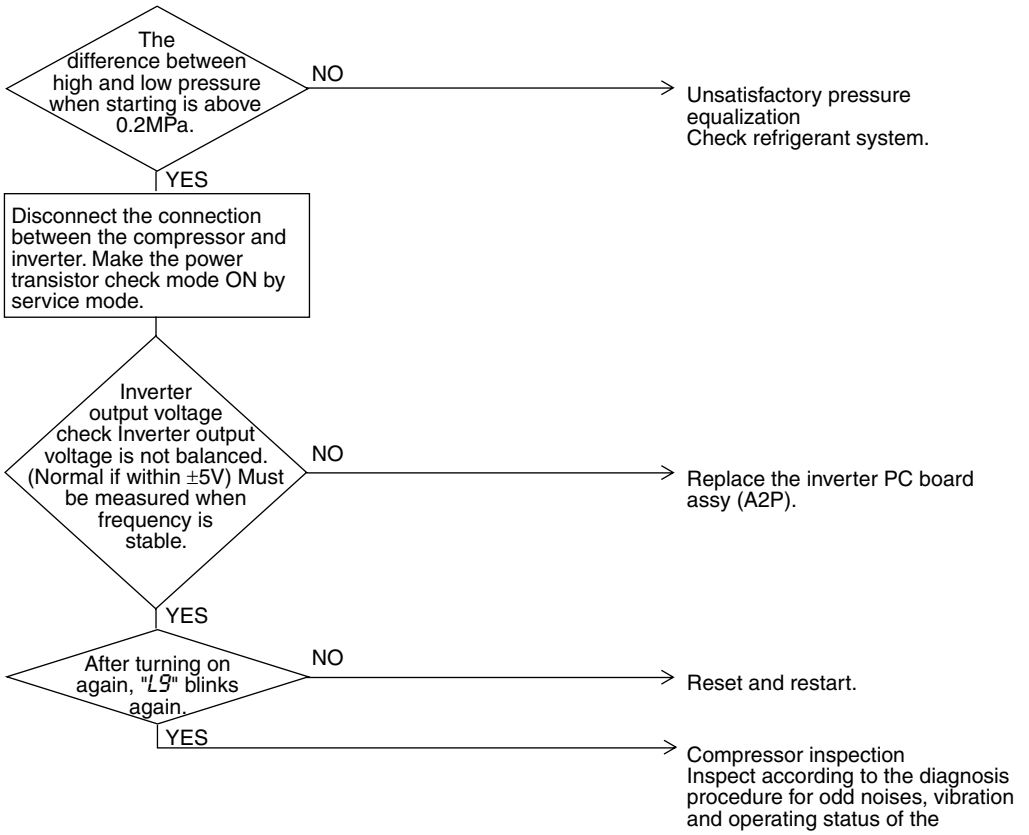

(V2814)

3.39 "LC" Outdoor Unit: Malfunction of Transmission between Inverter and Control PC Board

Remote Control Display

LC

Applicable Models

RXYSQ4~6PA

Method of Malfunction Detection

Check the communication state between inverter PC board and control PC board by micro-computer.

Malfunction Decision Conditions

When the correct communication is not conducted in certain period.

Supposed Causes

- Malfunction of connection between the inverter microcomputer and outdoor control microcomputer
- Defect of outdoor unit PC board (A1P)
- External factor (Noise etc.)

Troubleshooting

Caution Be sure to turn off power switch before connect or disconnect connector, or parts damage may be occurred.

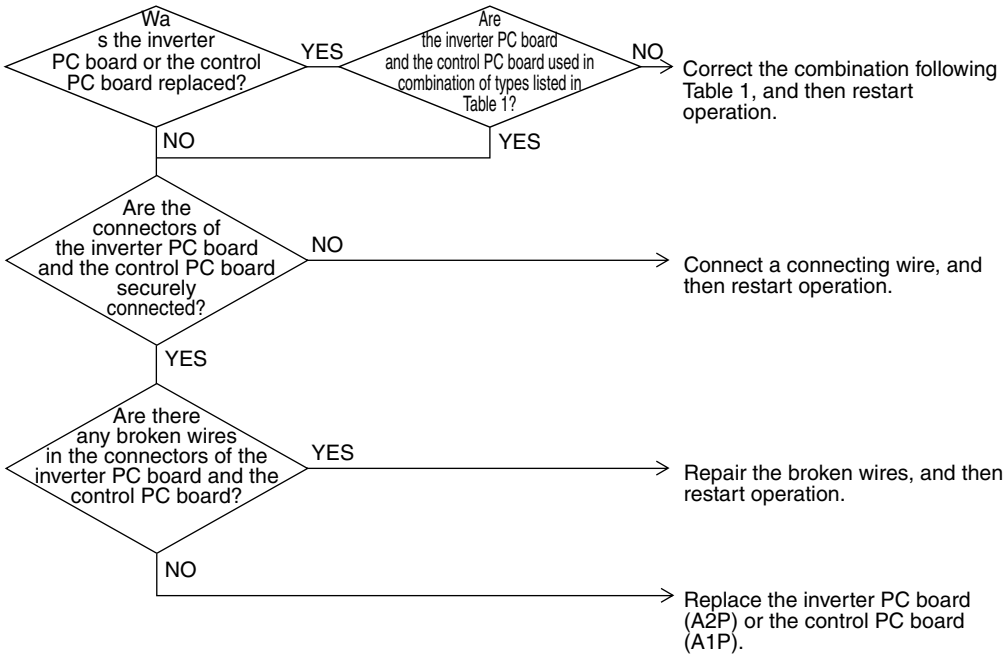

Table 1: Combination of PC boards

	Type of control PC board	Type of inverter PC board
RXYSQ4PA7Y1B RXYSQ5PA7Y1B RXYSQ6PA7Y1B	EC0640-1	PC0625-1

3.40 "P1" Outdoor Unit: High Voltage of Capacitor in Main Inverter Circuit

Remote Control Display

P1

Applicable Models

RXYSQ4~6PA

Method of Malfunction Detection

Malfunction is detected according to the voltage waveform of main circuit capacitor built in the inverter.

Malfunction Decision Conditions

When the aforementioned voltage waveform becomes identical with the waveform of the power supply open phase.

Supposed Causes

- Defect of main circuit capacitor
- Improper main circuit wiring
- Defect of outdoor unit PC board (A2P)
- Imbalance of phase-to-phase voltages
- Open phase

Troubleshooting

Caution Be sure to turn off power switch before connect or disconnect connector, or parts damage may be occurred.

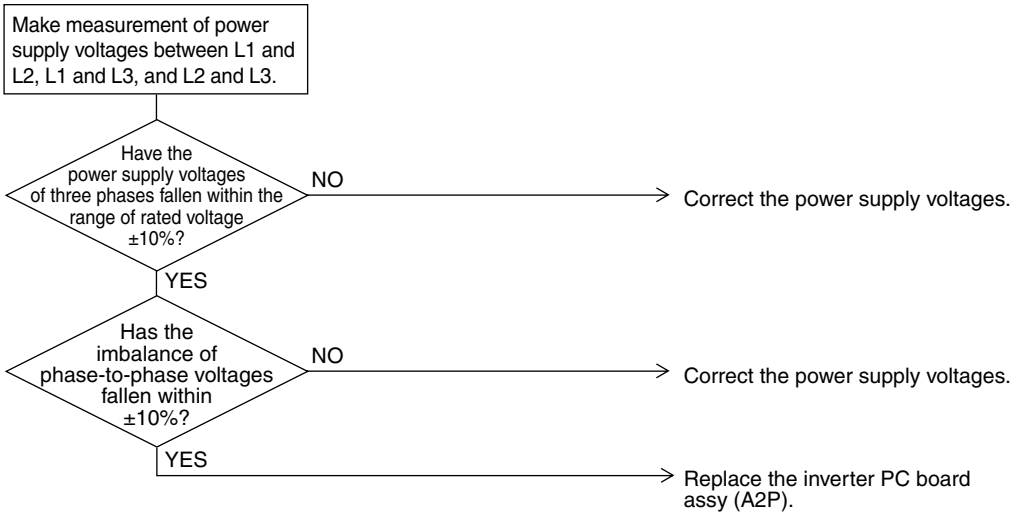

3.41 "U0" Low Pressure Drop Due to Refrigerant Shortage or Electronic Expansion Valve Failure

Remote Control Display	U0
Applicable Models	RXYSQ4~6PA
Method of Malfunction Detection	Short of gas malfunction is detected by discharge pipe temperature thermistor and low pressure saturation temperature.
Malfunction Decision Conditions	Microcomputer judge and detect if the system is short of refrigerant. ★Malfunction is not decided while the unit operation is continued.
Supposed Causes	■ Out of gas or refrigerant system clogging (incorrect piping) ■ Defect of pressure sensor ■ Defect of outdoor unit PC board (A1P) ■ Defect of thermistor R3T

Troubleshooting

Caution Be sure to turn off power switch before connect or disconnect connector, or parts damage may be occurred.

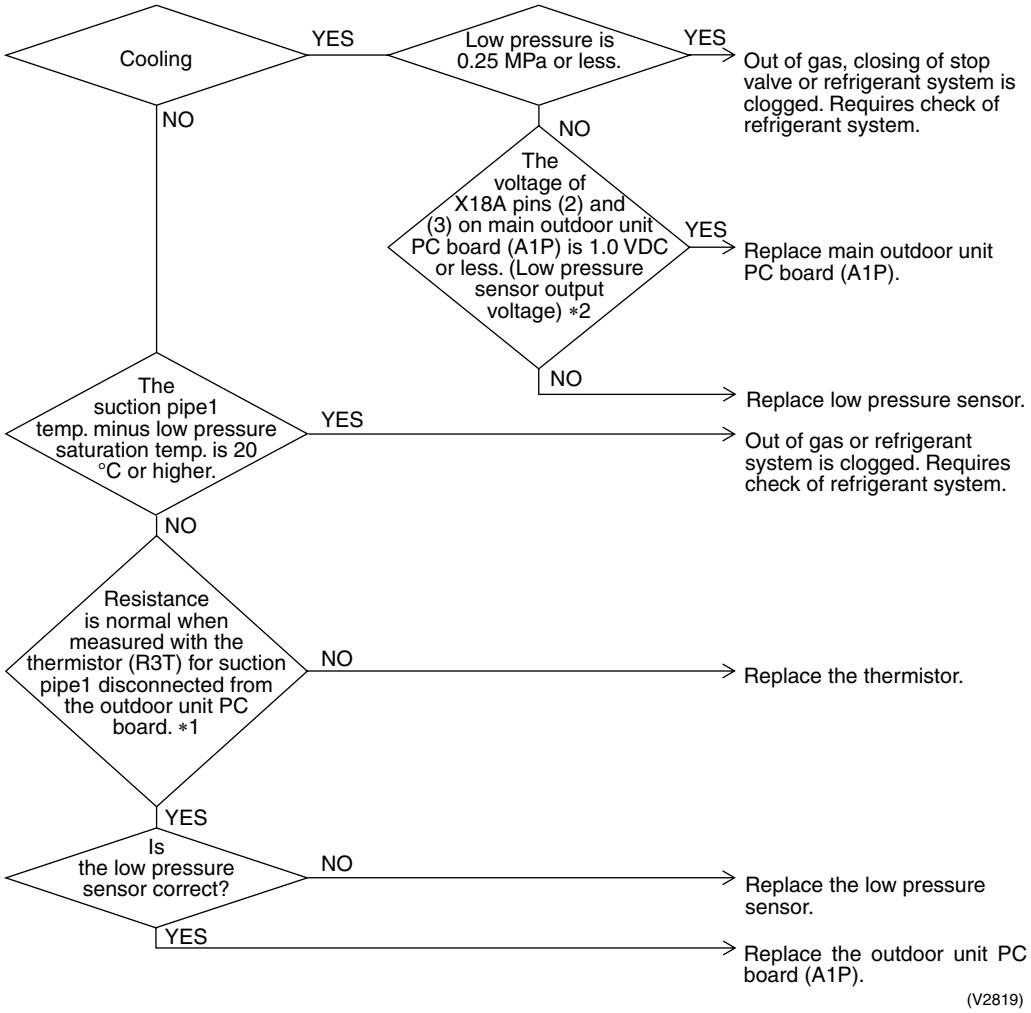

∗2: Voltage measurement point

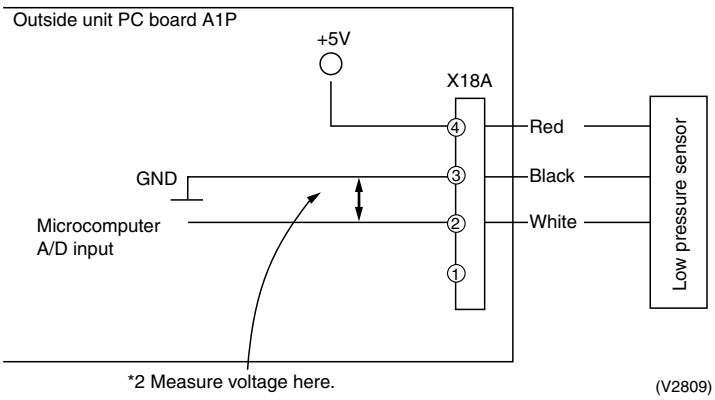

∗1: Refer to “Thermistor Resistance / Temperature Characteristics” table on P251.
∗2: Refer to “Pressure Sensor, Pressure / Voltage Characteristics” table on P253.

3.42 "U2" Power Supply Insufficient or Instantaneous Failure

Remote Control Display	U2
Applicable Models	RXYSQ4~6PA
Method of Malfunction Detection	Detection of voltage of main circuit capacitor built in the inverter and power supply voltage.
Malfunction Decision Conditions	When the abnormal voltage of main circuit capacitor built in the inverter and abnormal power supply voltage are detected.
Supposed Causes	■ Power supply insufficient ■ Instantaneous power failure ■ Defect of outdoor unit fan motor ■ Defect of outdoor inverter PC board (A2P)

Troubleshooting

Caution Be sure to turn off power switch before connect or disconnect connector, or parts damage may be occurred.

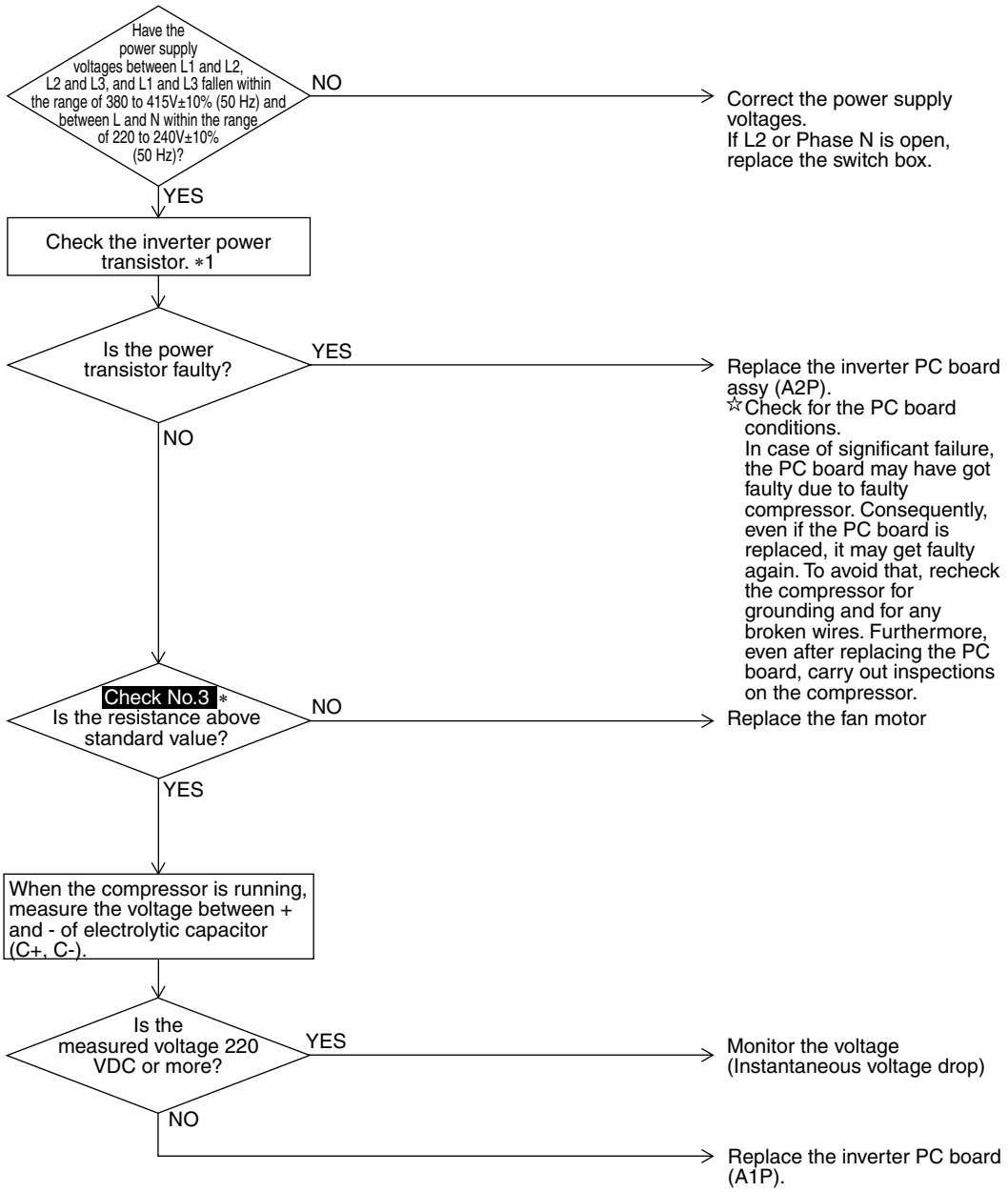

∗1: Inverter's Power Transistors Check : Refer to information on P.254~256.
∗Check No.3 : Refer to information on P.219.

3.43 "U3" Check Operation not Executed

Remote Control Display

U3

Applicable Models

RXYSQ4~6PA

Method of Malfunction Detection

Check operation is executed or not

Malfunction Decision Conditions

Malfunction is decided when the unit starts operation without check operation.

Supposed Causes

- Check operation is not executed.

Troubleshooting

Caution Be sure to turn off power switch before connect or disconnect connector, or parts damage may be occurred.

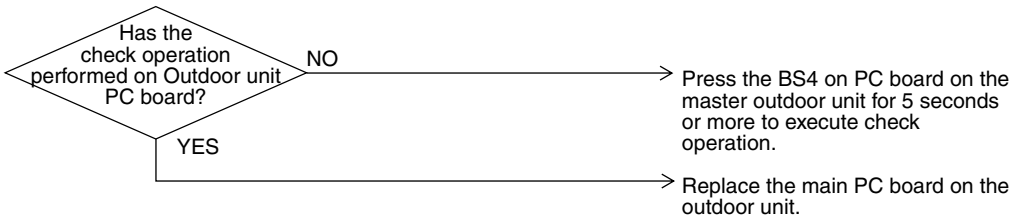

(V3052)

3.44 "U4" Malfunction of Transmission between Indoor Units and Outdoor Units

Remote Control Display	U4
Applicable Models	All indoor unit models RXYSQ4~6PA
Method of Malfunction Detection	Microcomputer checks if transmission between indoor and outdoor units is normal.
Malfunction Decision Conditions	When transmission is not carried out normally for a certain amount of time
Supposed Causes	■ Indoor to outdoor, outdoor to outdoor transmission wiring F1, F2 disconnection, short circuit or wrong wiring ■ Outdoor unit power supply is OFF ■ System address doesn't match ■ Defect of outdoor unit PC board ■ Defect of indoor unit PC board

Troubleshooting

Caution Be sure to turn off power switch before connect or disconnect connector, or parts damage may be occurred.

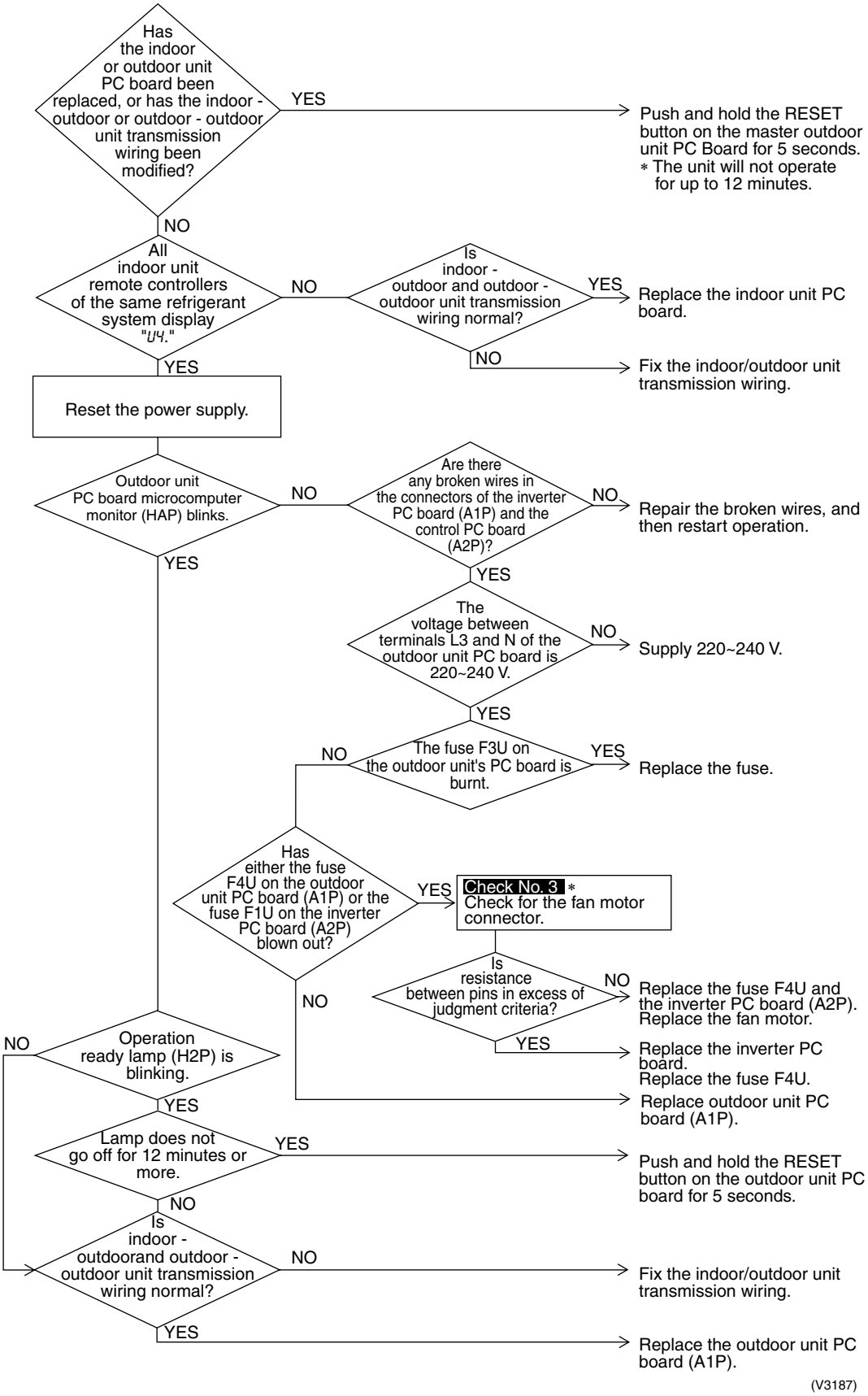

∗ Check No.3 : Refer to information on P.219.

3.45 "U5" Malfunction of Transmission between Remote Control and Indoor Unit

Remote Control Display

U5

Applicable Models

All indoor unit models

Method of Malfunction Detection

In case of controlling with 2-remote control, check the system using microcomputer is signal transmission between indoor unit and remote control (main and sub) is normal.

Malfunction Decision Conditions

Normal transmission does not continue for specified period.

Supposed Causes

- Malfunction of indoor unit remote control transmission
- Connection of two main remote controls (when using 2 remote controls)
- Defect of indoor unit PC board
- Defect of remote control PC board
- Malfunction of transmission caused by noise

Troubleshooting

Caution Be sure to turn off power switch before connect or disconnect connector, or parts damage may be occurred.

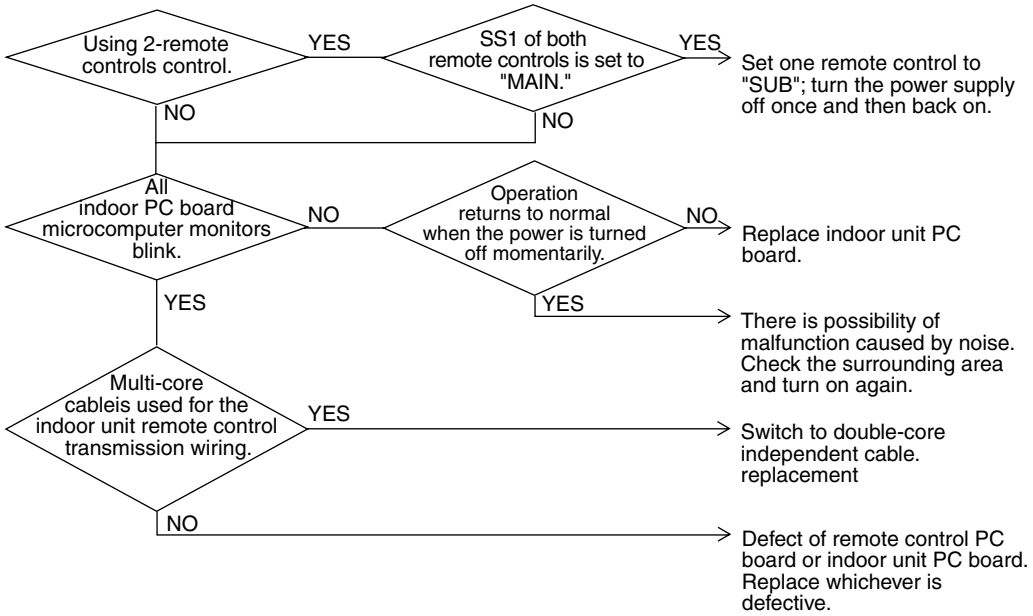

3.46 "U8" Malfunction of Transmission between Main and Sub Remote Controls

Remote Control Display

U8

Applicable Models

All indoor unit models

Method of Malfunction Detection

In case of controlling with 2-remote control, check the system using microcomputer if signal transmission between indoor unit and remote control (main and sub) is normal.

Malfunction Decision Conditions

Normal transmission does not continue for specified period.

Supposed Causes

- Malfunction of transmission between main and sub remote control
- Connection between sub remote controls
- Defect of remote control PC board

Troubleshooting

Caution Be sure to turn off power switch before connect or disconnect connector, or parts damage may be occurred.

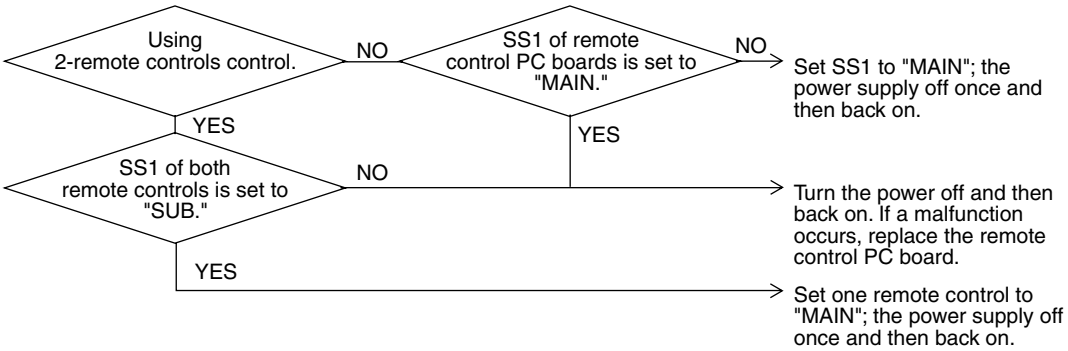

3.47 "U9" Malfunction of Transmission between Indoor and Outdoor Units in the Same System

Remote Control Display	U9
Applicable Models	All indoor unit models
Method of Malfunction Detection	
Malfunction Decision Conditions	
Supposed Causes	■ Malfunction of transmission within or outside of other system ■ Malfunction of electronic expansion valve in indoor unit of other system ■ Defect of PC board of indoor unit in other system ■ Improper connection of transmission wiring between indoor and outdoor unit

Troubleshooting

Caution Be sure to turn off power switch before connect or disconnect connector, or parts damage may be occurred.

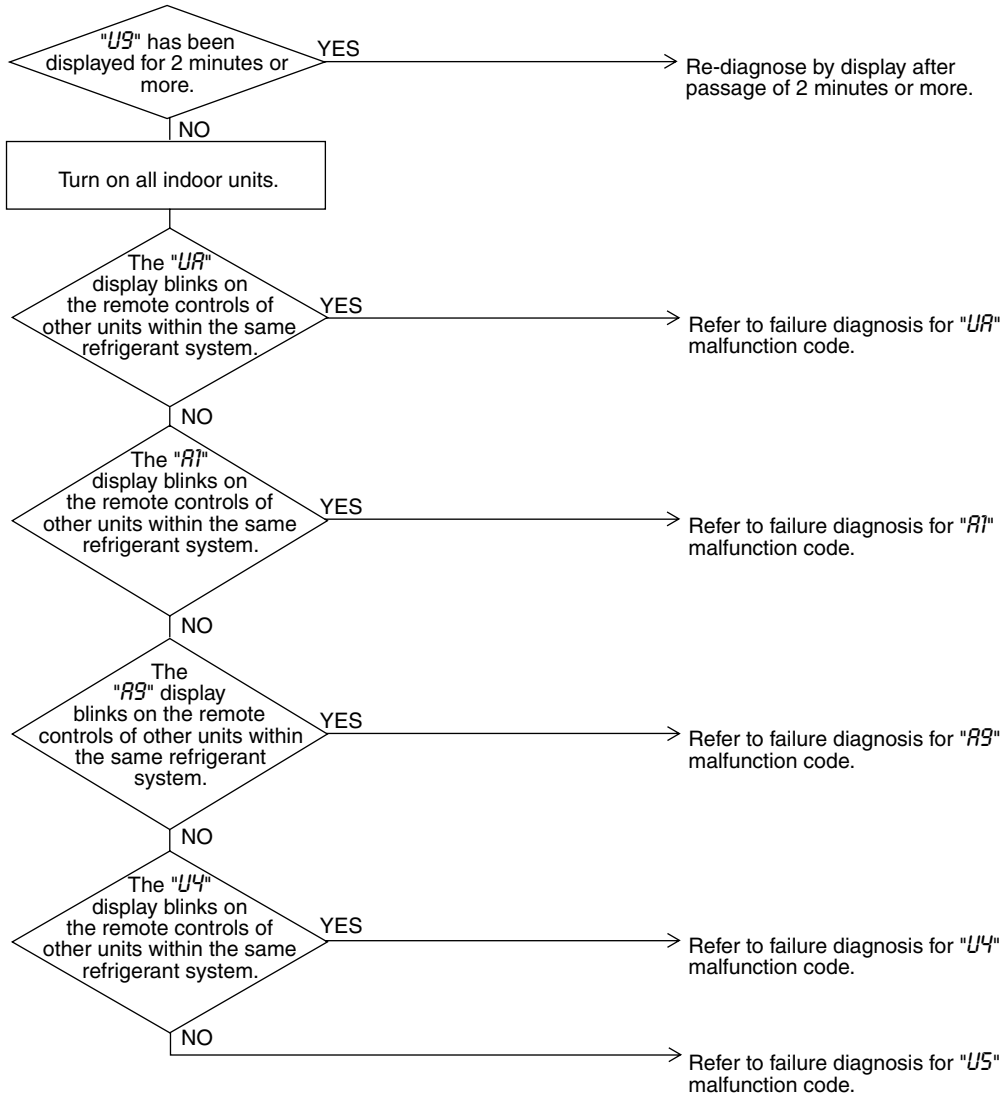

3.48 "UA" Excessive Number of Indoor Units

Remote Control Display

UA

Applicable Models

All indoor unit models

Method of Malfunction Detection

Malfunction Decision Conditions

Supposed Causes

- Excess of connected indoor units
- Defect of outdoor unit PC board (A1P)
- Mismatching of the refrigerant type of indoor and outdoor unit.
- Setting of outdoor PC board was not conducted after replacing to spare parts PC board.

Troubleshooting

Caution Be sure to turn off power switch before connect or disconnect connector, or parts damage may be occurred.

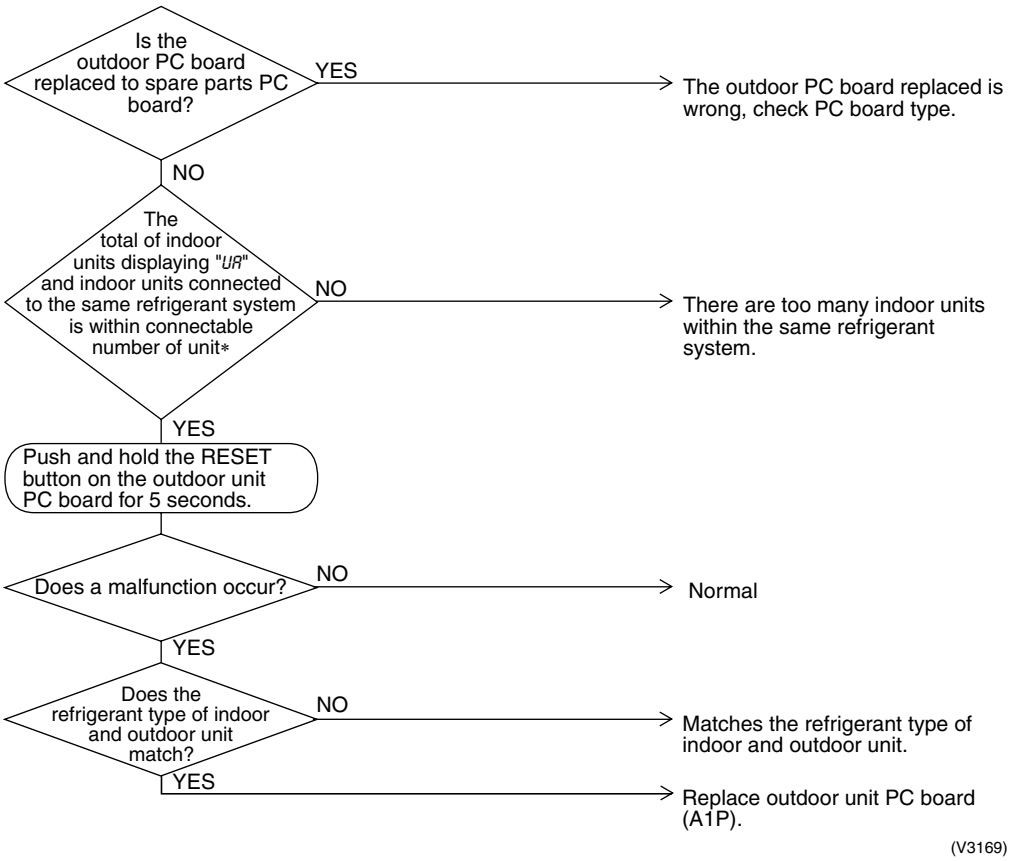

* The number of indoor units that can be connected to a single outdoor unit system depends on the type of outdoor unit.

3.49 "UC" Address Duplication of Central Remote Control

Remote Control Display

UC

Applicable Models

All indoor unit models

Method of Malfunction Detection

Malfunction Decision Conditions

Supposed Causes

- Address duplication of centralized remote control
- Defect of indoor unit PC board

Troubleshooting

Caution Be sure to turn off power switch before connect or disconnect connector, or parts damage may be occurred.

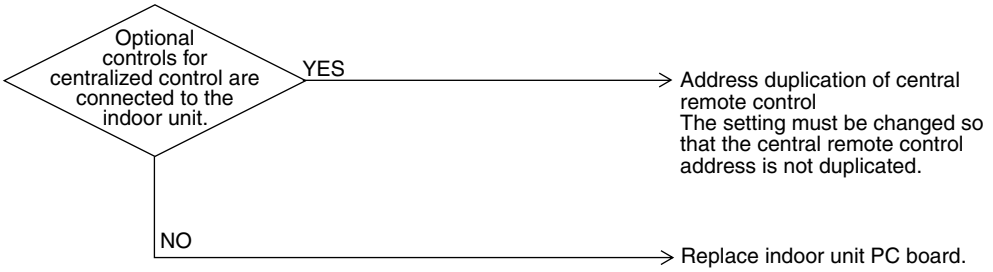

(V2828)

3.50 "UE" Malfunction of Transmission between Central Remote Control and Indoor Unit

Remote Control Display

UE

Applicable Models

All indoor unit models
Centralized control

Method of Malfunction Detection

Microcomputer checks if transmission between indoor unit and centralized remote control is normal.

Malfunction Decision Conditions

When transmission is not carried out normally for a certain amount of time

Supposed Causes

- Malfunction of transmission between optional controls for centralized control and indoor unit
- Connector for setting master controller is disconnected.
- Failure of PC board for centralized remote control
- Defect of indoor unit PC board

Troubleshooting

Caution Be sure to turn off power switch before connect or disconnect connector, or parts damage may be occurred.

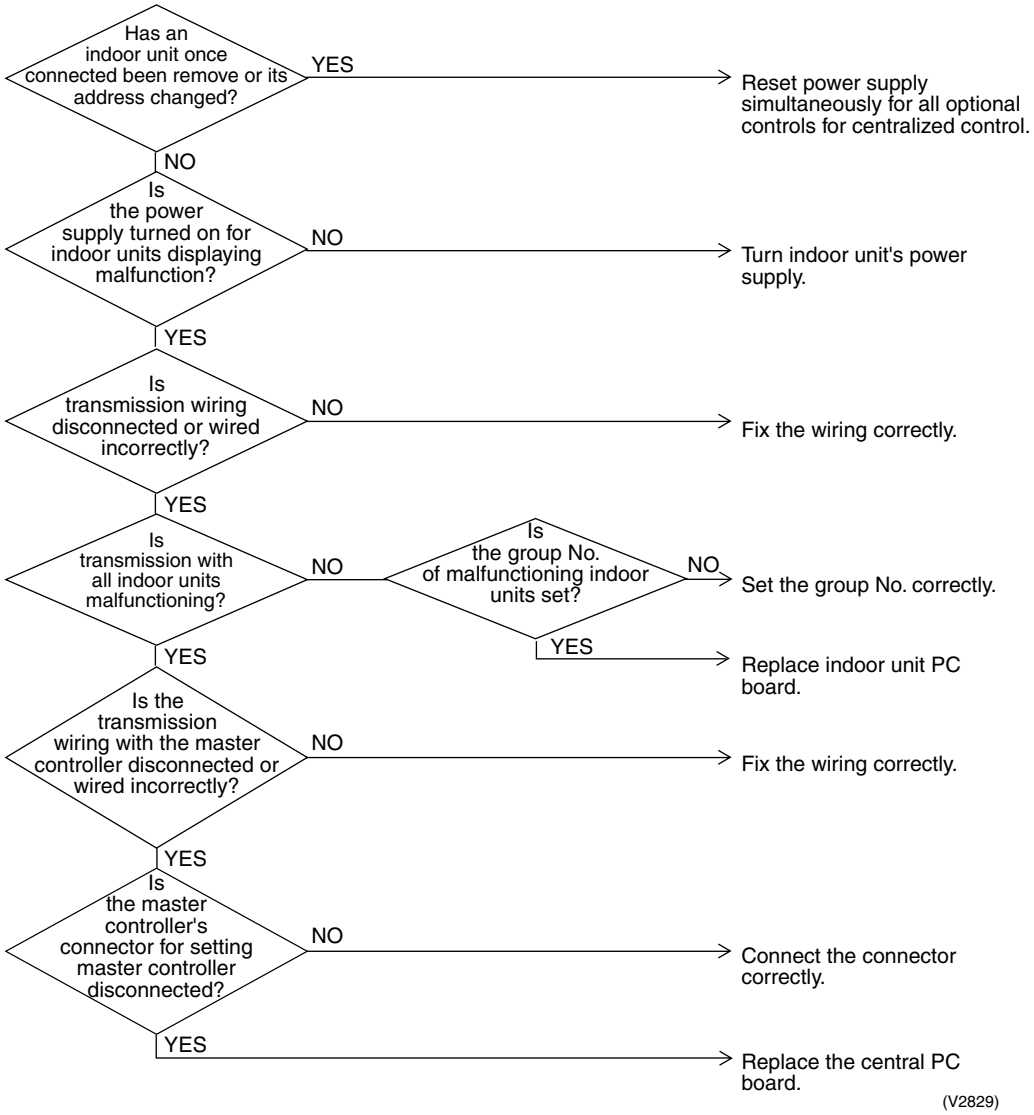

3.51 "UF" System is not Set yet

Remote Control Display

UF

Applicable Models

All models of indoor units
RXYSQ4~6PA

Method of Malfunction Detection

On check operation, the number of indoor units in terms of transmission is not corresponding to that of indoor units that have made changes in temperature.

Malfunction Decision Conditions

The malfunction is determined as soon as the abnormality aforementioned is detected through checking the system for any erroneous connection of units on the check operation.

Supposed Causes

- Improper connection of transmission wiring between indoor-outdoor units and outdoor-outdoor units
- Failure to execute check operation
- Defect of indoor unit PC board
- Stop valve is left in closed

Troubleshooting

Caution Be sure to turn off power switch before connect or disconnect connector, or parts damage may be occurred.

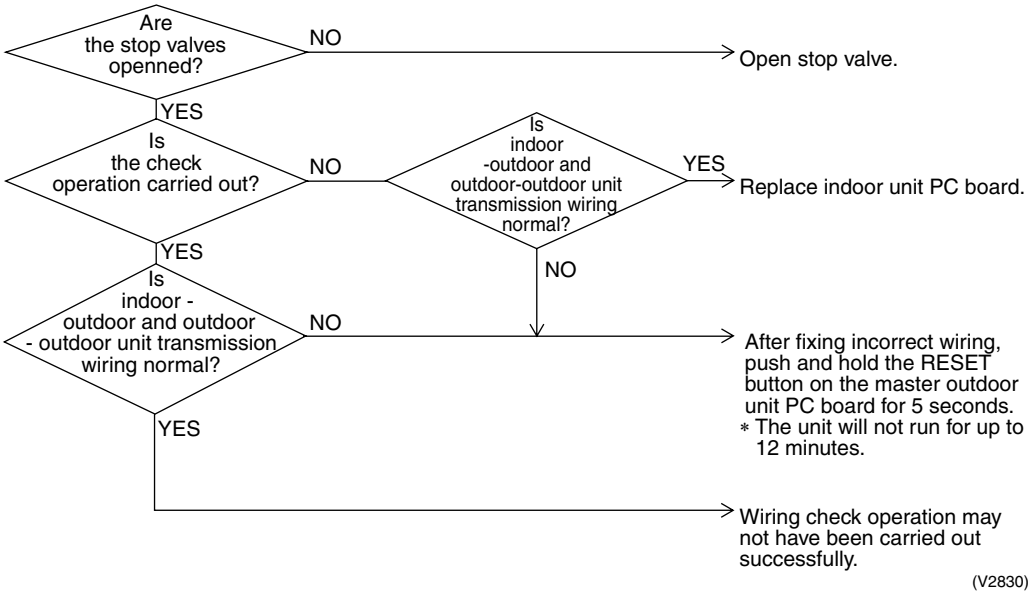

Note: Wiring check operation may not be successful if carried out after the outdoor unit has been off for more than 12 hours, or if it is not carried out after running all connected indoor units in the fan mode for at least an hour.

3.52 "UH" Malfunction of System, Refrigerant System Address Undefined

Remote Control Display

UH

Applicable Models

All indoor unit models
RXYSQ4~6PA

Method of Malfunction Detection

Malfunction Decision Conditions

Supposed Causes

- Improper connection of transmission wiring between outdoor unit and outdoor unit outside control adapter
- Defect of indoor unit PC board
- Defect of outdoor unit PC board (A1P)

Troubleshooting

Caution Be sure to turn off power switch before connect or disconnect connector, or parts damage may be occurred.

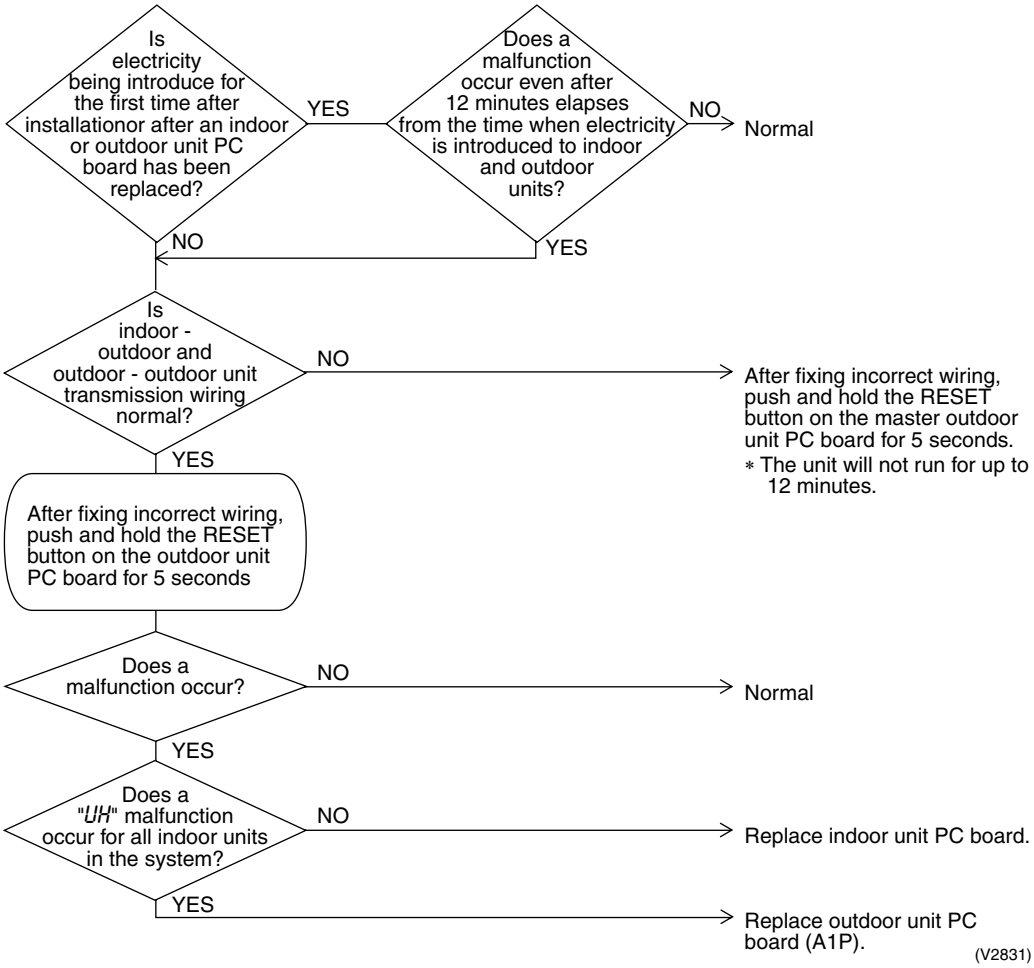

4. Troubleshooting by Indication on the Centralized Remote Control

4.1 "UE" Malfunction of Transmission between Centralized Remote Control and Indoor Unit

Remote Control Display	UE
Applicable Models	All indoor unit models Centralized Remote Control
Method of Malfunction Detection	Microcomputer checks if transmission between indoor unit and central remote control is normal.
Malfunction Decision Conditions	When transmission is not carried out normally for a certain amount of time
Supposed Causes	■ Malfunction of transmission between optional controllers for centralized control and indoor unit ■ Connector for setting master controller is disconnected. ■ Failure of PC board for central remote control ■ Defect of indoor unit PC board

Troubleshooting

Caution Be sure to turn off power switch before connect or disconnect connector, or parts damage may be occurred.

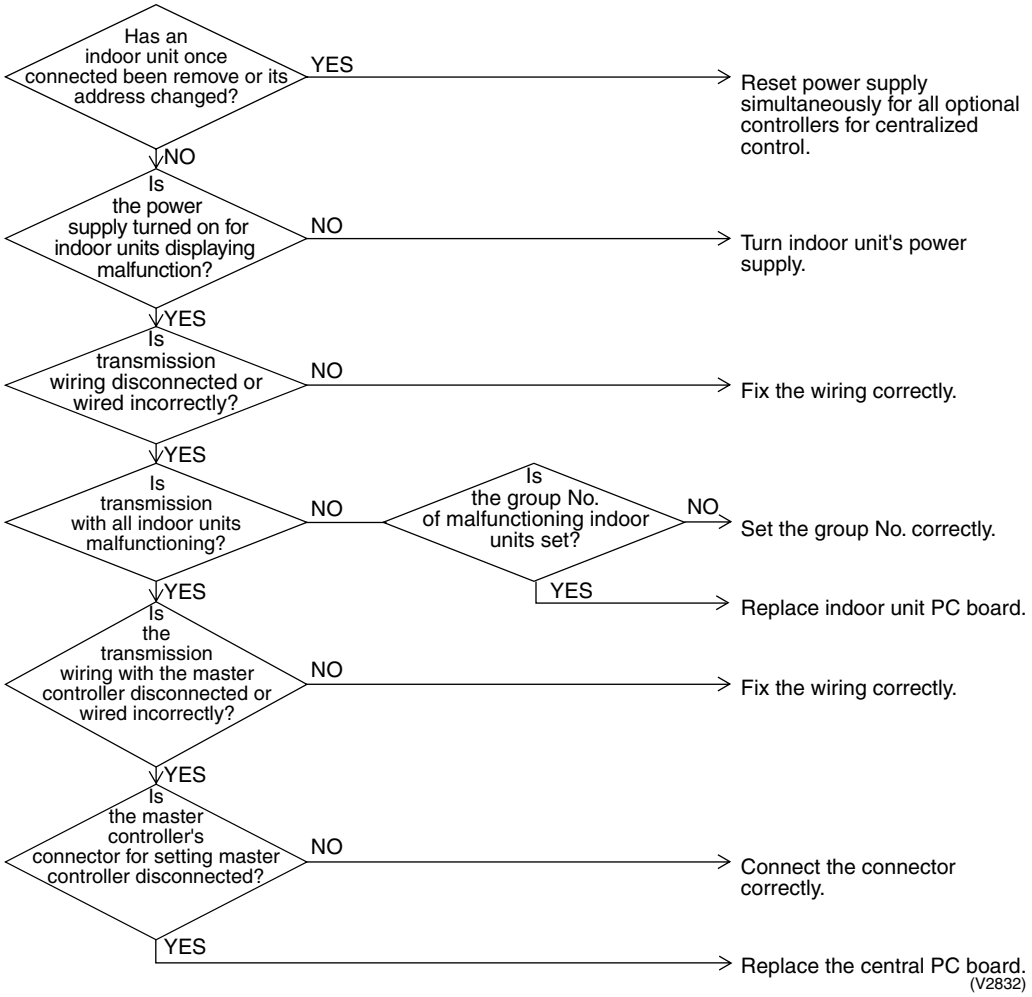

4.2 "M1" PC Board Defect

Remote Control Display

M1

Applicable Models

Centralized remote control

Method of Malfunction Detection

Malfunction Decision Conditions

Supposed Causes

- Defect of central remote control PC board

Troubleshooting

Replace the central remote control PC board.

4.3 "M8" Malfunction of Transmission between Optional Controllers for Centralized Control

Remote Control Display

M8

Applicable Models

Centralized remote control

Method of Malfunction Detection

Malfunction Decision Conditions

Supposed Causes

- Malfunction of transmission between optional controllers for centralized control
- Defect of PC board of optional controllers for centralized control

Troubleshooting

Caution Be sure to turn off power switch before connect or disconnect connector, or parts damage may be occurred.

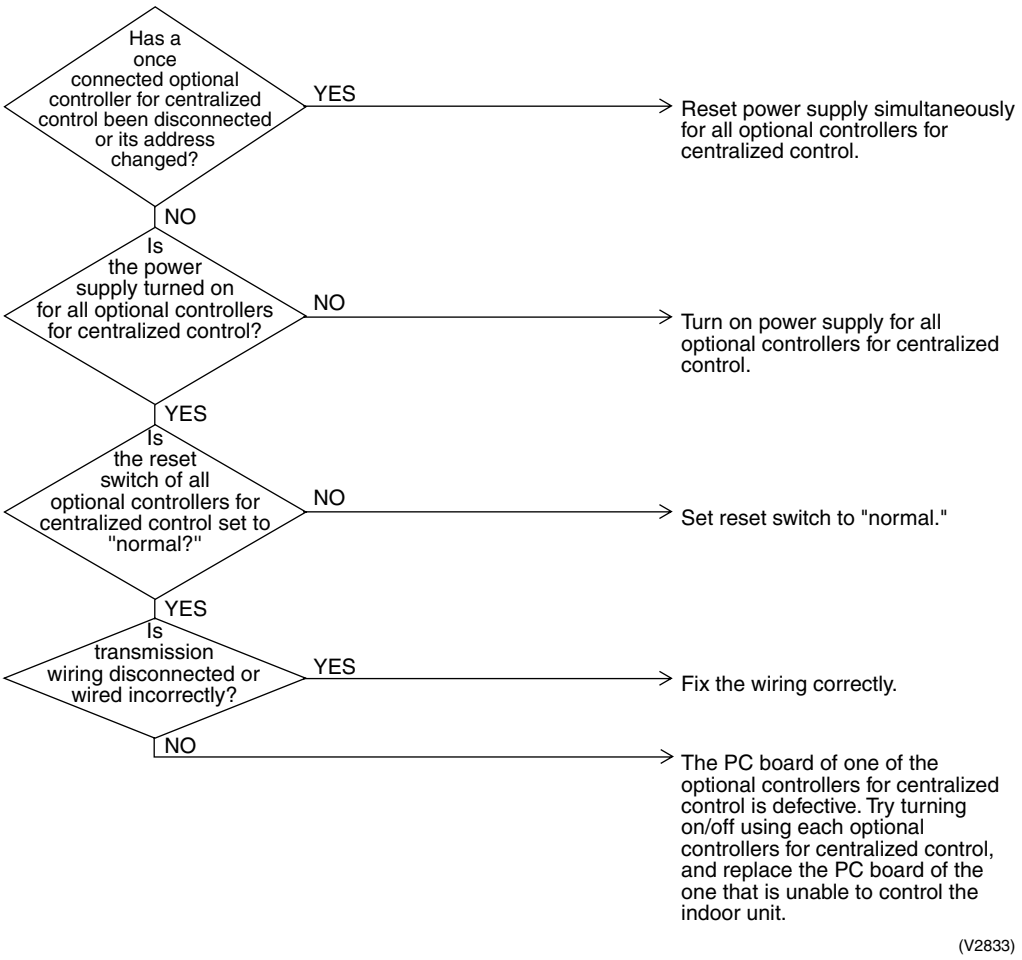

(V2833)

4.4 "MA" Improper Combination of Optional Controllers for Centralized Control

Remote Control Display	MA
Applicable Models	Centralized remote control
Method of Malfunction Detection	
Malfunction Decision Conditions	
Supposed Causes	■ Improper combination of optional controls for centralized control ■ More than one master controller is connected ■ Defect of PC board of optional controller for centralized control

Troubleshooting

Caution Be sure to turn off power switch before connect or disconnect connector, or parts damage may be occurred.

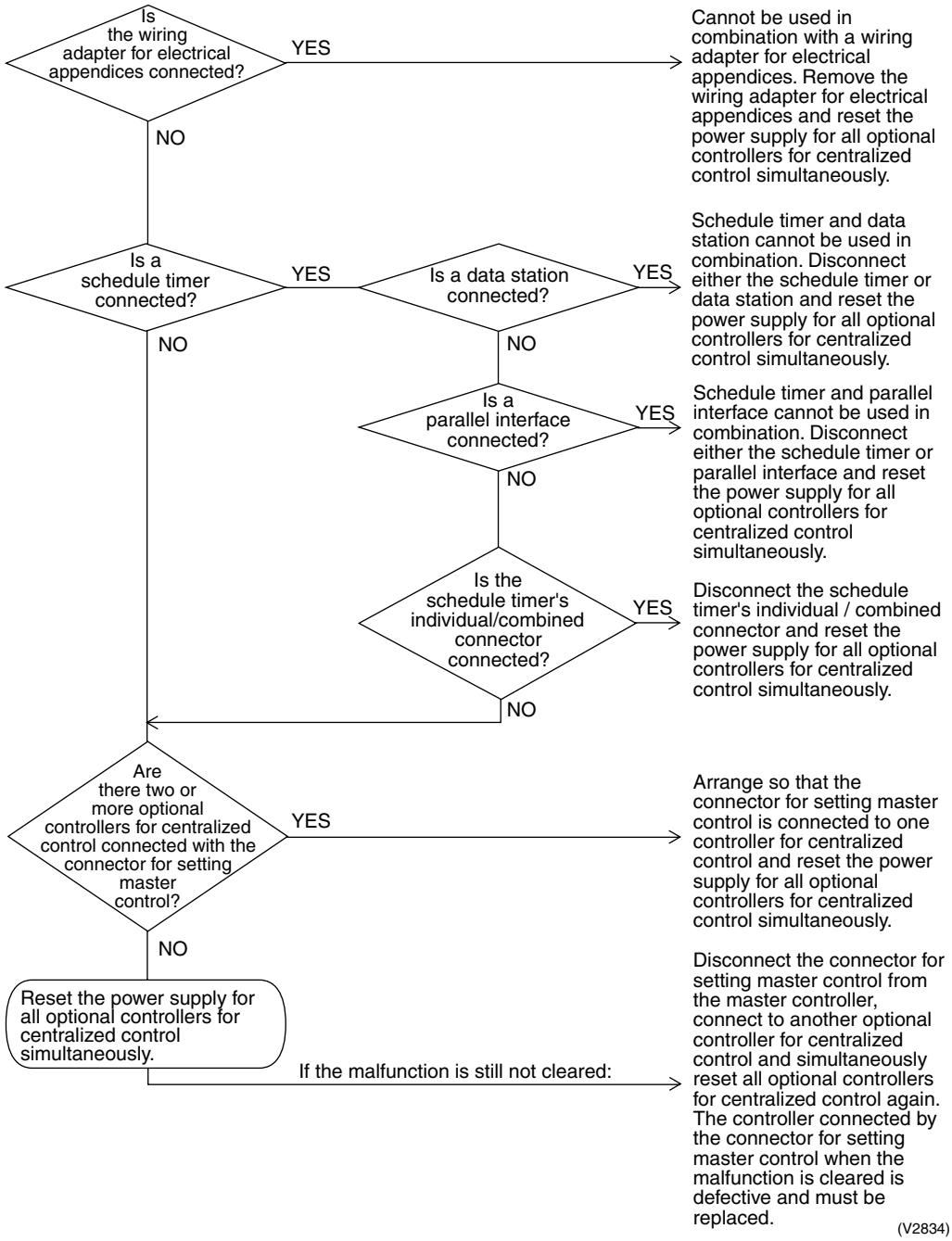

4.5 "MC" Address Duplication, Improper Setting

Remote Control Display

MC

Applicable Models

Centralized remote control

Method of Malfunction Detection

Malfunction Decision Conditions

Supposed Causes

- Address duplication of centralized remote control

Troubleshooting

Caution Be sure to turn off power switch before connect or disconnect connector, or parts damage may be occurred.

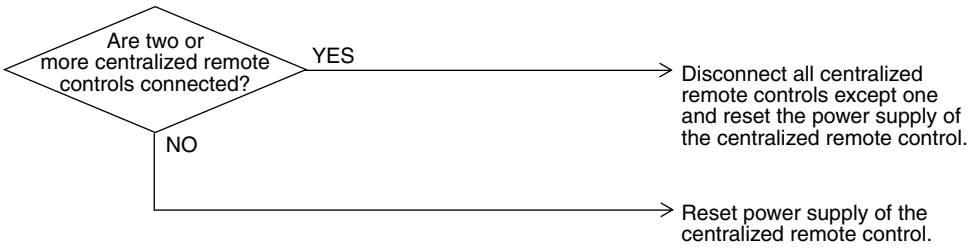

(V2835)

5. Troubleshooting by Indication on the Unified ON/OFF Controller

5.1 Operation Lamp Blinks

Remote Control Display	Operation lamp blinks
Applicable Models	All models of indoor units Unified ON/OFF controller
Method of Malfunction Detection	
Malfunction Decision Conditions	
Supposed Causes	■ Malfunction of transmission between optional controller and indoor unit ■ Connector for setting master controller is disconnected ■ Defect of unified ON/OFF controller ■ Defect of indoor unit PC board ■ Malfunction of air conditioner

Troubleshooting

Caution Be sure to turn off power switch before connect or disconnect connector, or parts damage may be occurred.

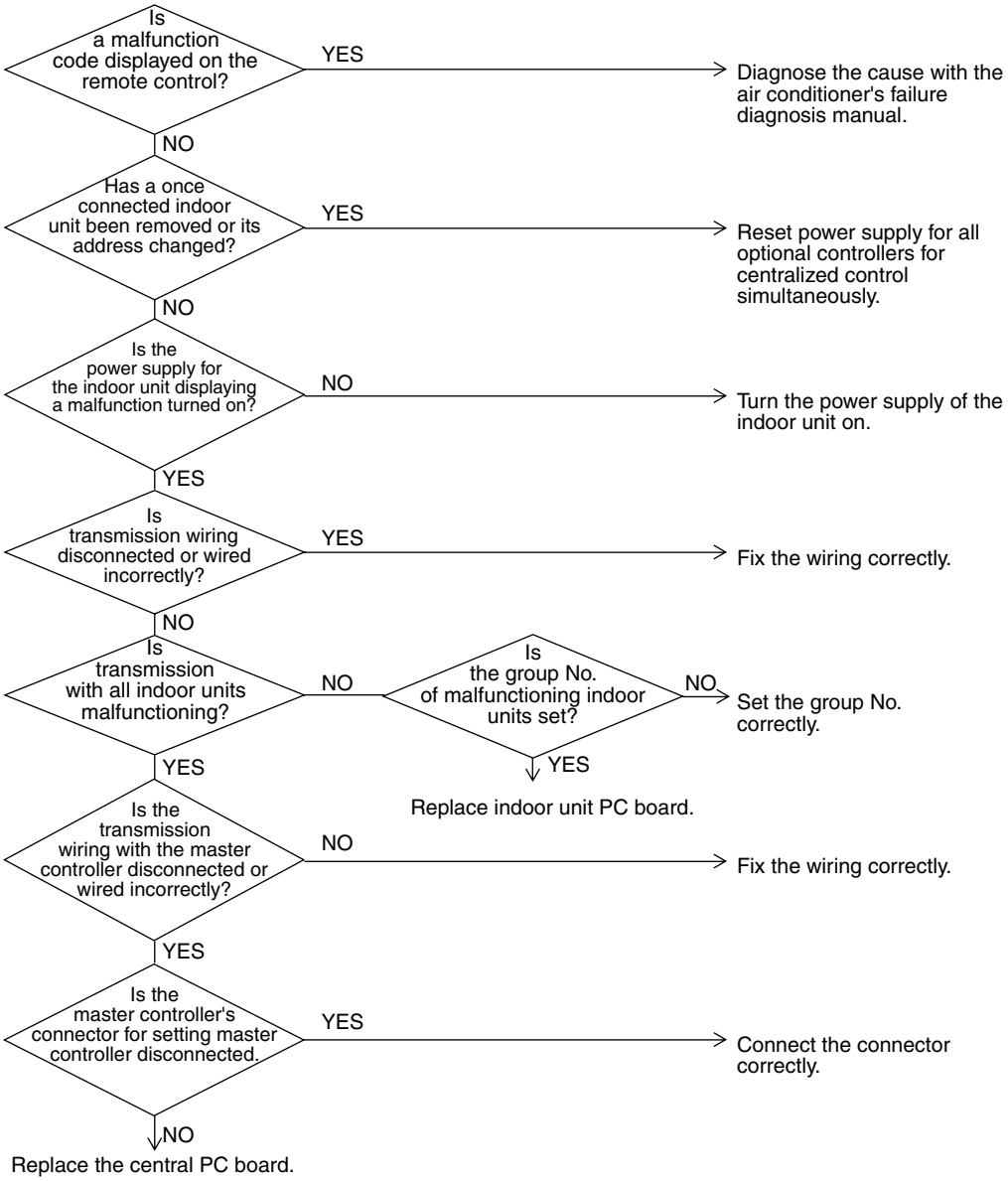

5.2 Display “Under Host Computer Integrate Control” Blinks (Repeats Single Blink)

Remote Control Display	“under host computer integrated control” (Repeats single blink)
Applicable Models	Unified ON/OFF controller Central controller, Schedule timer
Method of Malfunction Detection	
Malfunction Decision Conditions	
Supposed Causes	■ Address duplication of central remote control ■ Improper combination of optional controllers for centralized control ■ Connection of more than one master controller ■ Malfunction of transmission between optional controllers for centralized control ■ Defect of PC board of optional controllers for centralized control

Troubleshooting

Caution Be sure to turn off power switch before connect or disconnect connector, or parts damage may be occurred.

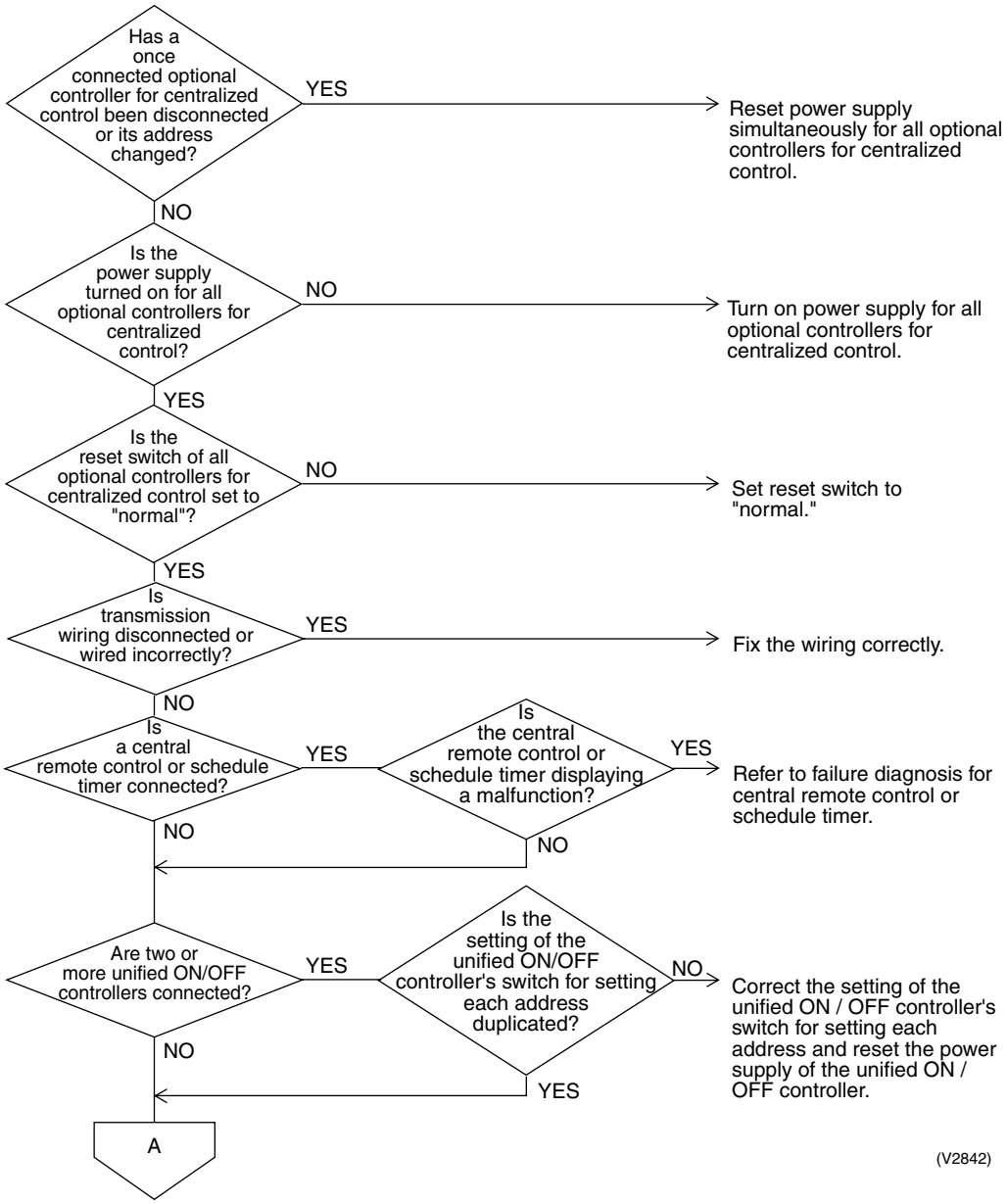

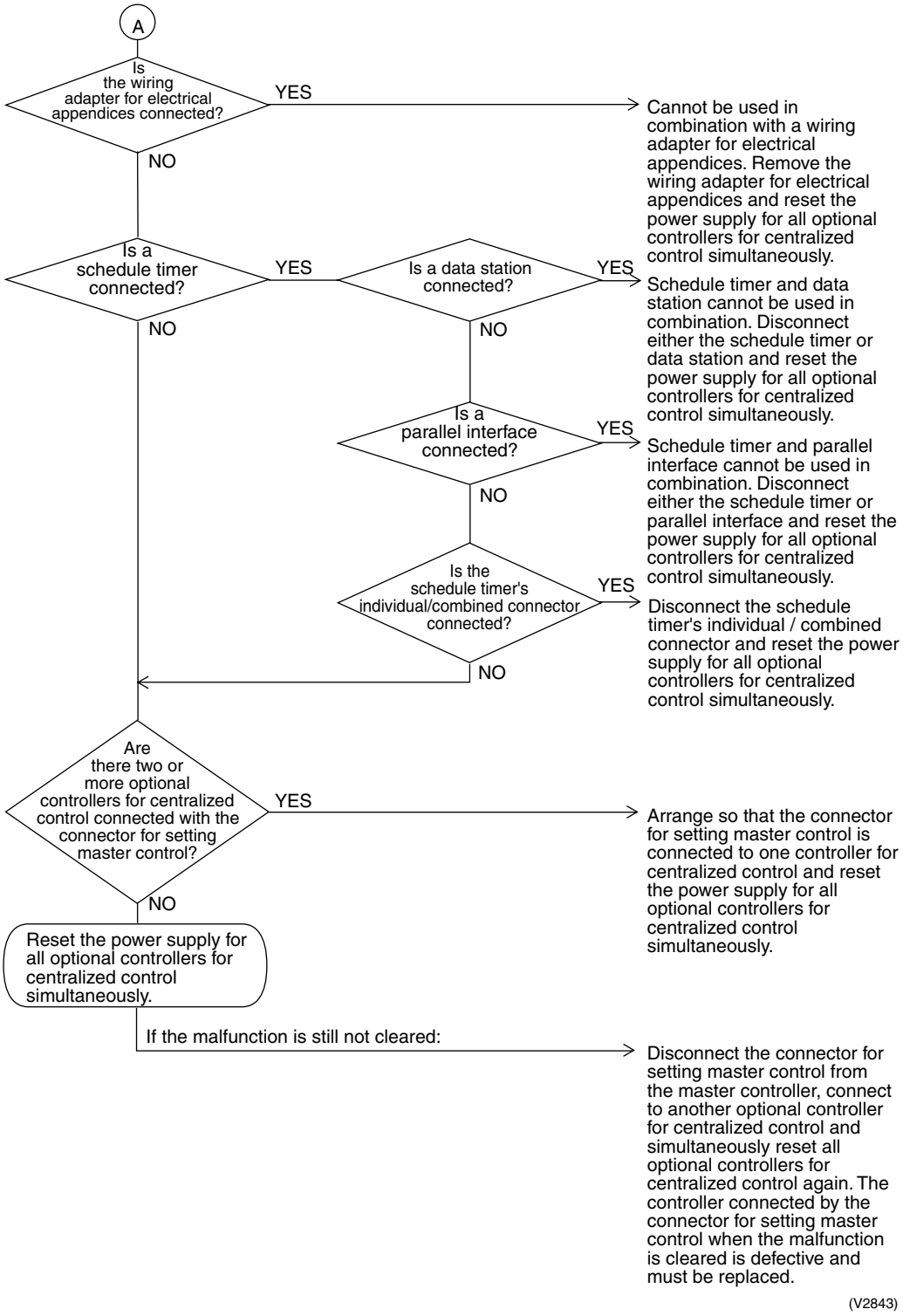
A
Is the wiring adapter for electrical appendices connected?
YES
Cannot be used in combination with a wiring adapter for electrical appendices. Remove the wiring adapter for electrical appendices and reset the power supply for all optional controllers for centralized control simultaneously.
NO
Is a schedule timer connected?
YES
Is a data station connected?
YES
Schedule timer and data station cannot be used in combination. Disconnect either the schedule timer or data station and reset the power supply for all optional controllers for centralized control simultaneously.
NO
NO
Is a parallel interface connected?
YES
Schedule timer and parallel interface cannot be used in combination. Disconnect either the schedule timer or parallel interface and reset the power supply for all optional controllers for centralized control simultaneously.
NO
Is the schedule timer's individual/combined connector connected?
YES
Disconnect the schedule timer's individual / combined connector and reset the power supply for all optional controllers for centralized control simultaneously.
NO
Are there two or more optional controllers for centralized control connected with the connector for setting master control?
YES
Arrange so that the connector for setting master control is connected to one controller for centralized control and reset the power supply for all optional controllers for centralized control simultaneously.
NO
Reset the power supply for all optional controllers for centralized control simultaneously.
If the malfunction is still not cleared:
Disconnect the connector for setting master control from the master controller, connect to another optional controller for centralized control and simultaneously reset all optional controllers for centralized control again. The controller connected by the connector for setting master control when the malfunction is cleared is defective and must be replaced.
(V2843)

5.3 Display “Under Host Computer Integrate Control” Blinks (Repeats Double Blink)

Remote Control Display

“under host computer integrated control” (Repeats double blink)

Applicable Models

Unified ON/OFF controller

Method of Malfunction Detection

Malfunction Decision Conditions

Supposed Causes

- Central control address (group No.) is not set for indoor unit.
- Improper address setting
- Improper wiring of transmission wiring

Troubleshooting

Caution Be sure to turn off power switch before connect or disconnect connector, or parts damage may be occurred.

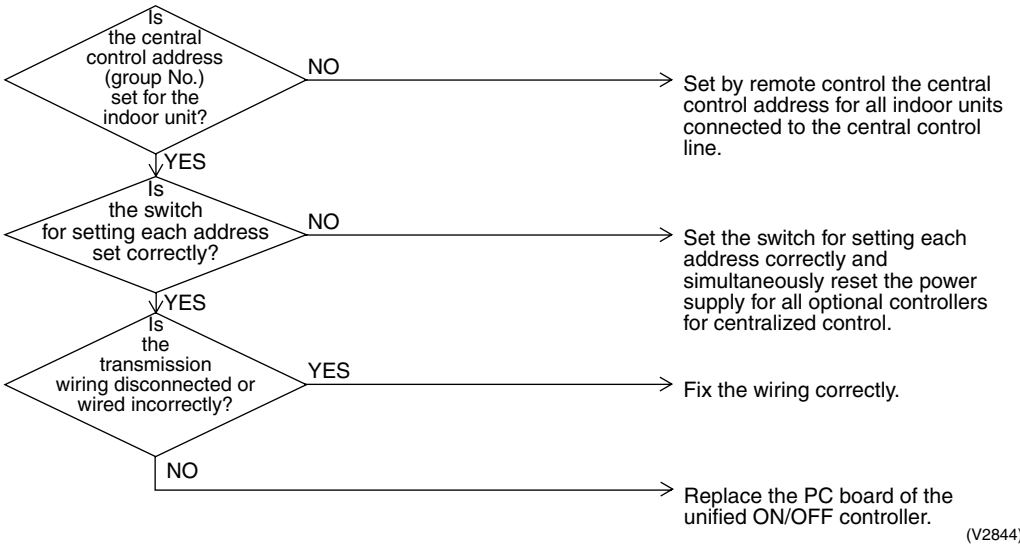

[CHECK 1] Check for causes of rise in high pressure

Referring to the Fault Tree Analysis (FTA) shown below, probe the faulty points.

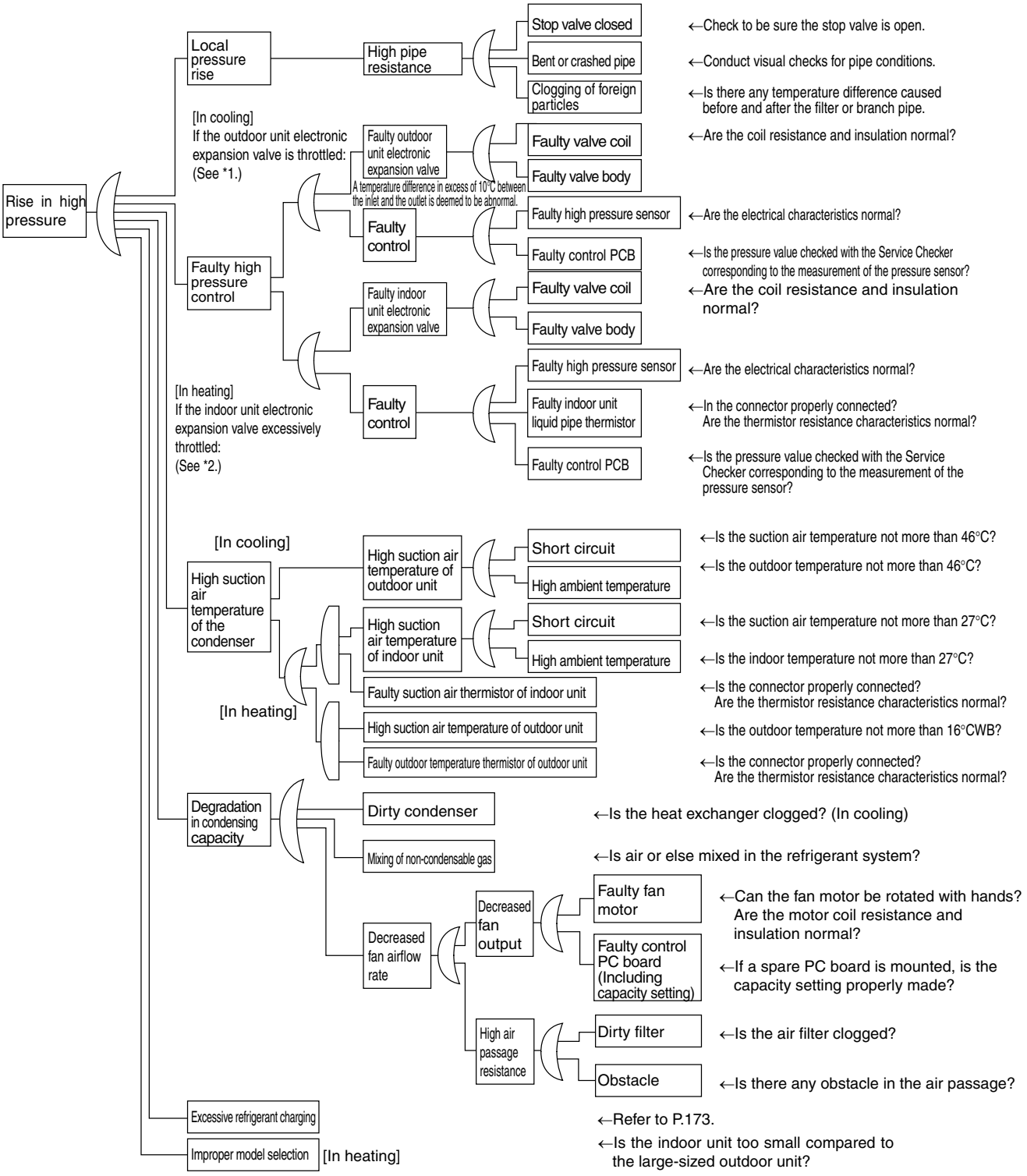

*1: In cooling, it is normal if the outdoor unit electronic expansion valve (EV1) is fully open.
*2: In heating, the indoor unit electronic expansion valve is used for “subcooled degree control”.
(For details, refer to “Electronic Expansion Valve Control” on P.72.)

C: SDK04009

[CHECK 2] Check for causes of drop in low pressure

Referring to the Fault Tree Analysis (FTA) shown below, probe the faulty points.

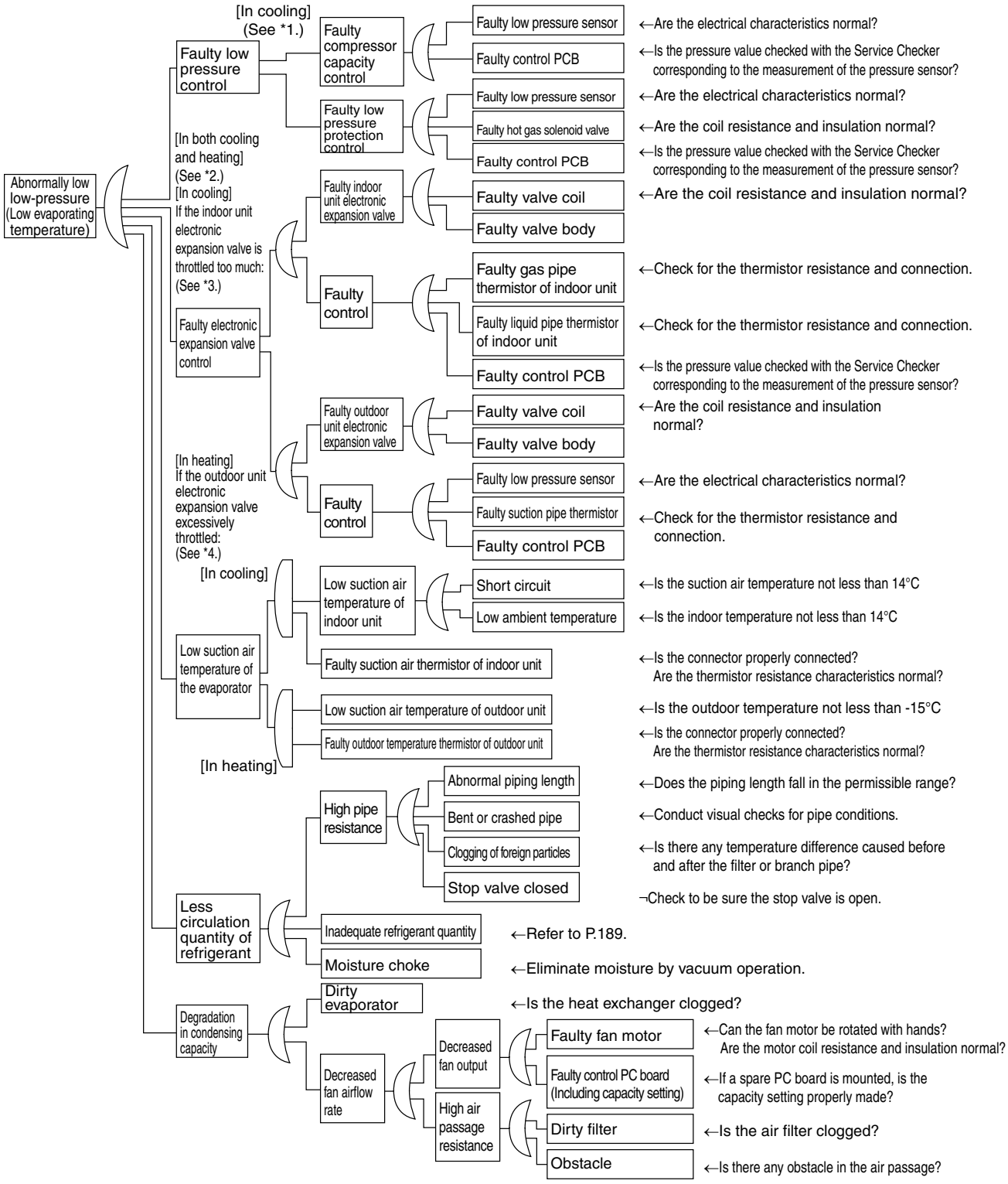

*1: For details of the compressor capacity control while in cooling, refer to "Compressor PI Control" on P.50.
*2: The "low pressure protection control" includes low pressure protection control and hot gas bypass control. For details, refer to P.61.
*3: In cooling, the indoor unit electronic expansion valve is used for "superheated degree control". (For details, refer to P.72.)
*4: In heating, the outdoor unit electronic expansion valve (EV1) is used for "superheated degree control of outdoor unit heat exchanger". (For details, refer to P.51.)

C: SDK04009

[CHECK 3] Check for Fan Motor Connector

(1) Turn the power supply off.

(2) With the fan motor connector on motor side disconnected, measure the resistance between each pin, then make sure that the resistance is more than the value mentioned in the following table.

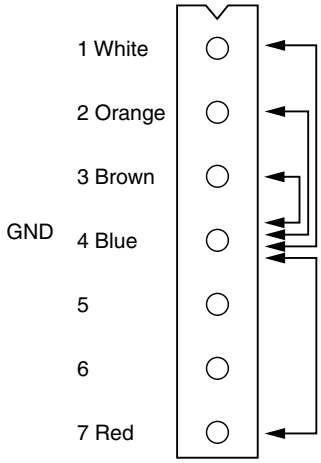

Measurement point	Judgment
1 - 4	1MΩ or more
2 - 4	100kΩ or more
3 - 4	100Ω or more
4 - 7	100kΩ or more

Part 8
Appendix

1. Piping Diagrams 222
   1.1 Outdoor Unit 222
   1.2 Indoor Unit 224
2. Wiring Diagrams 227
   2.1 Outdoor Unit 227
   2.2 Field Wiring 229
   2.3 Indoor Unit 231
3. Option List 246
   3.1 Option List of Controllers 246
   3.2 Option List of Outdoor Unit 248
4. Example of Connection 249
5. Thermistor Resistance / Temperature Characteristics 251
6. Pressure Sensor 253
7. Method of Replacing the Inverter's Power Transistors Modules 254

1. Piping Diagrams

1.1 Outdoor Unit

RXYSQ4 / 5 / 6PA7Y1B

3D057917

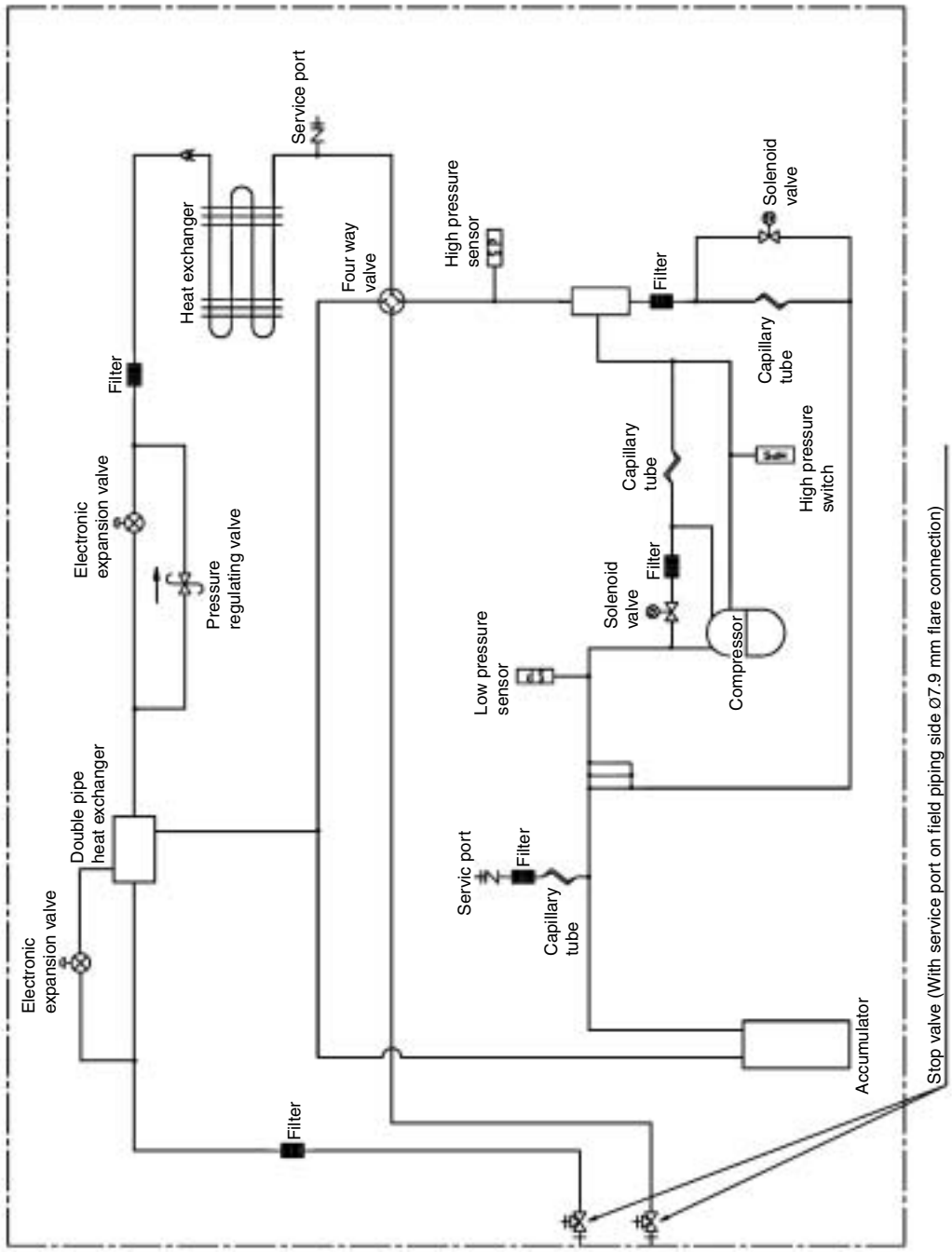

RXYSQ4 / 5 / 6PA7V1B

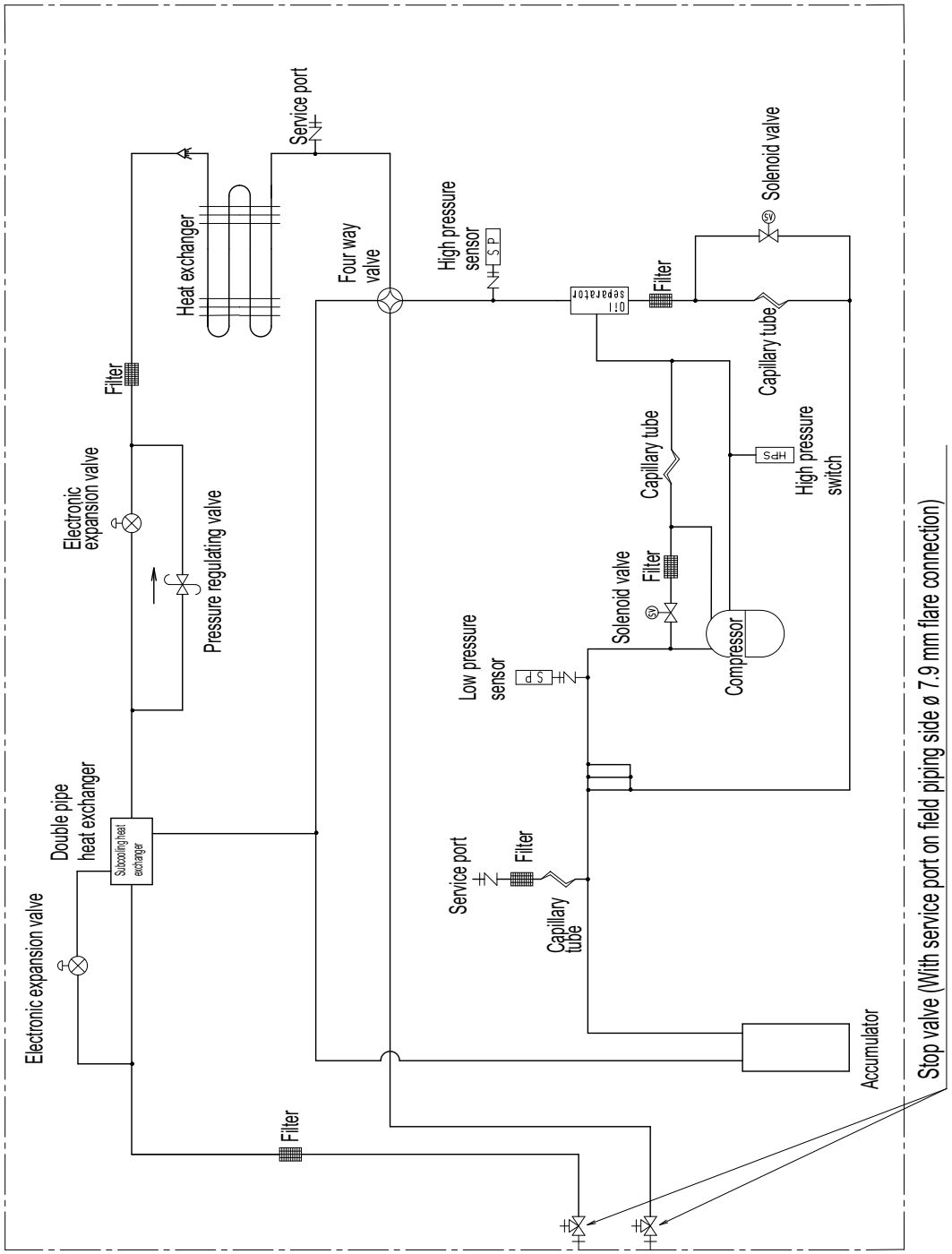

C : 3D052712

1.2 Indoor Unit

FXCQ, FXFQ, FXZQ, FXKQ, FXSQ, FXMQ, FXHQ, FXAQ, FXLQ, FXNQ

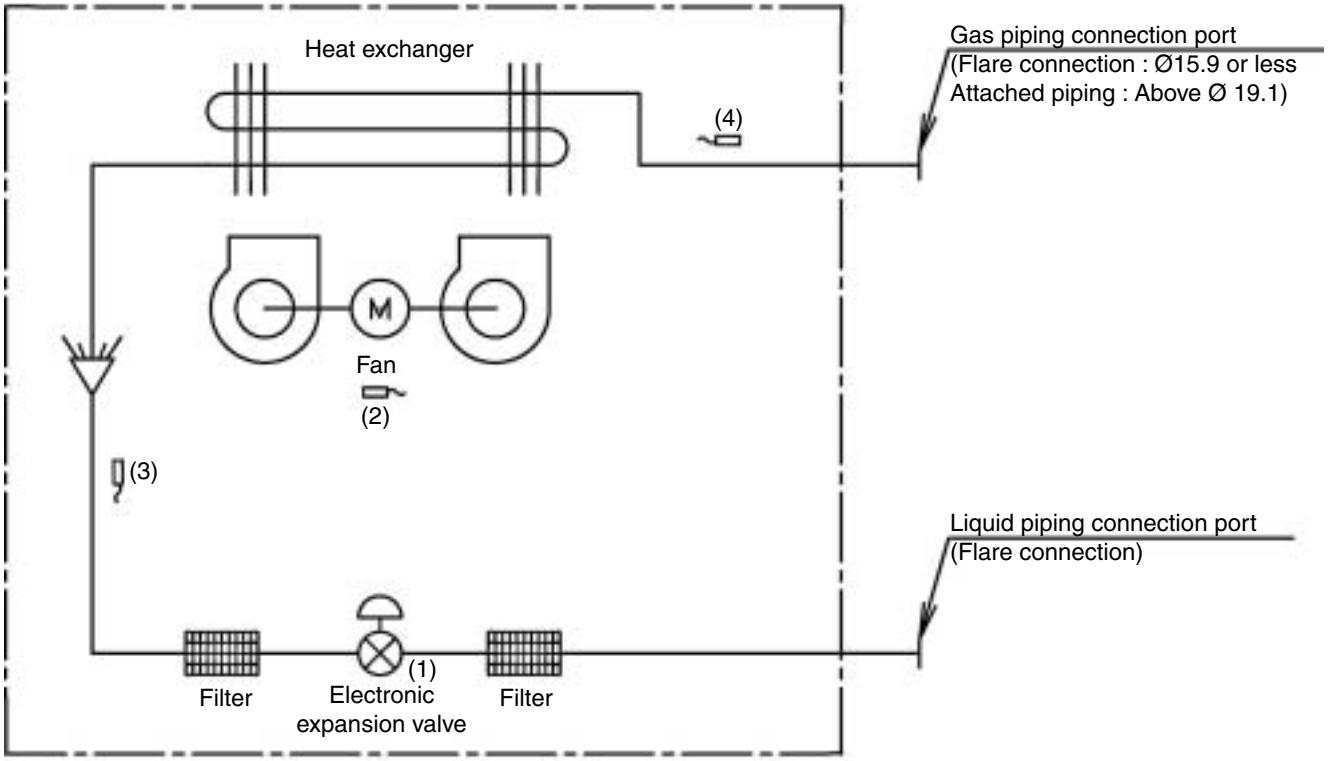

Code	Name	Code	Main function
(1)	Electronic expansion valve	Y1E	Used for gas superheated degree control while in cooling operation or subcooled degree control while in heating operation.
(2)	Suction air temperature thermistor	R1T	Used for thermostat control.
(3)	Liquid pipe	R2T	Used for gas superheated degree control while in cooling operation or subcooled degree control while in heating operation.
(4)	Gas pipe	R3T	Used for gas superheated degree control while in cooling operation.

(mm)

Capacity	GAS	Liquid
20 / 25 / 32 / 40 / 50	ϕ12.7	ϕ6.4
63 / 80 / 100 / 125	ϕ15.9	ϕ9.5

FXDQ

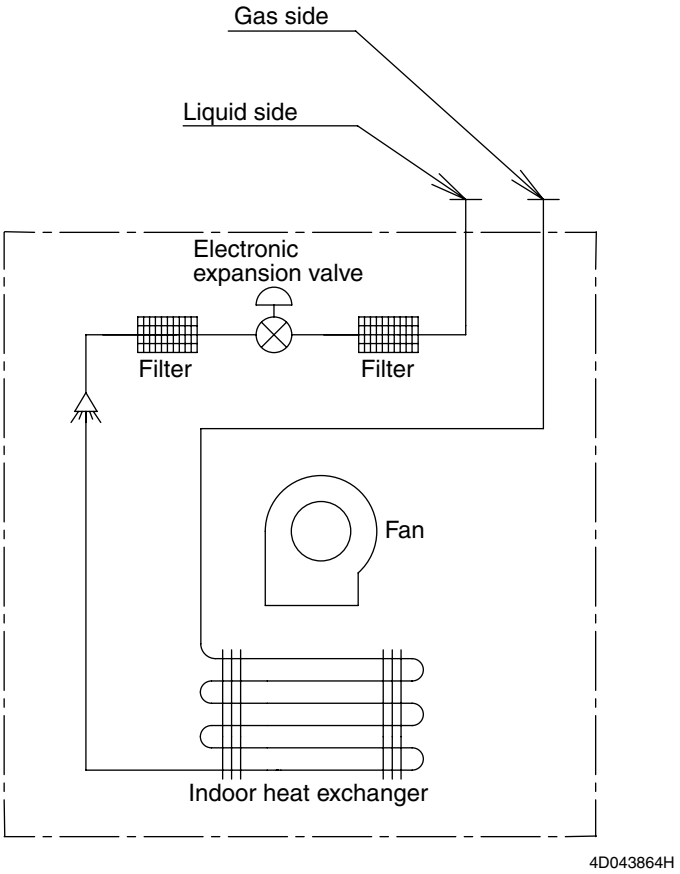

■ Refrigerant pipe connection port diameters

(mm)

Model	Gas	Liquid
FXDQ20 / 25 / 32 / 40 / 50	ϕ12.7	ϕ6.4
FXDQ63	ϕ15.9	ϕ9.5

FXUQ + BEVQ

Indoor Unit

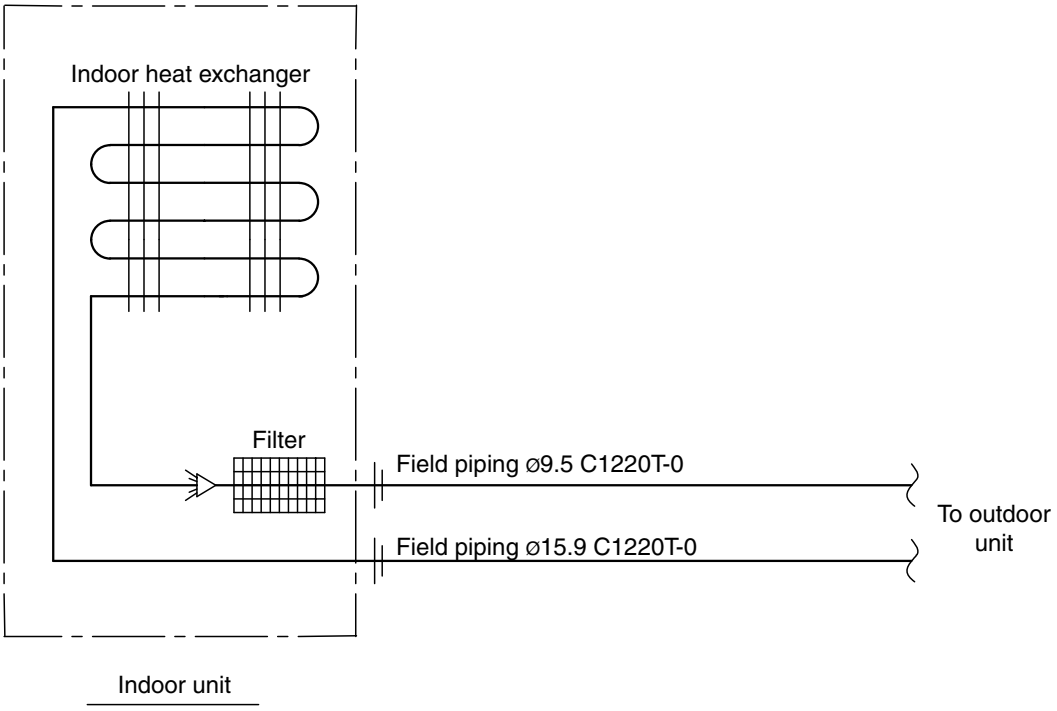

Connection Unit

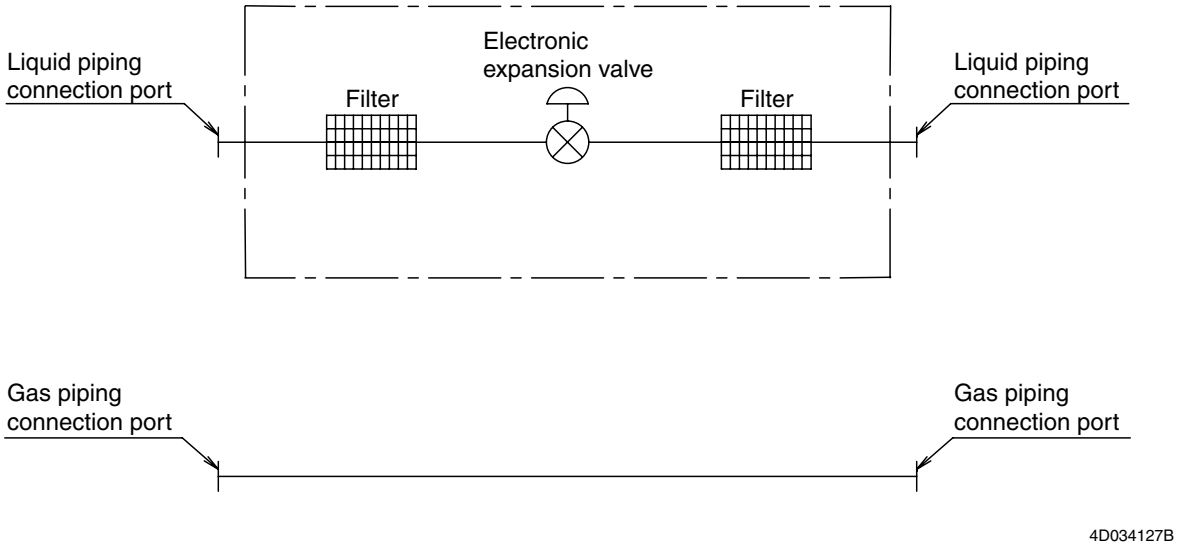

2. Wiring Diagrams

2.1 Outdoor Unit

RXYSQ4 / 5 / 6PA7Y1B

L1-RED	L2-WHT L3-BLK N-BLU
A1P	Printed circuit board (Main)
A2P	Printed circuit board (Inv)
BS1~5	Push button switch (Mode, set, return, test, reset)
C1-C2-C3	Capacitor
DS1	Dip switch
E1HC	Crankcase heater
F1,3,4U(A1P)	Fuse(T6.3A 250V)
H1P~8P	Pilot Lamp (service monitor orange) [H2P] Prepare, Test -- Flickering Malfunction detection - light up
HAP (A1P)	Operation pilot lamp (service monitor green)
HAP (A2P)	Operation lamp (Service monitor green)
K1M (A1P)	Magnetic contactor
K1R	Magnetic relay (Y1S)
K2R	Magnetic relay (Y2S)
K3R	Magnetic relay (Y3S)
K4R	Magnetic relay (E1HC)
K5R, K6R	Magnetic relay
L1R	Reactor
M1C	Motor (Compressor)
M1F-M2F	Motor (Fan)
PS	Power supply
R1(A1P)	Resistor
R1-R2 (A2P)	Resistor
R1T	Thermistor (Air)
R2T	Thermistor (M1C discharge)
R3T	Thermistor (Suction 1)
R4T	Thermistor (Subcool)
R5T	Thermistor (Suction 2)
R6T	Thermistor (Coil)
R7T	Thermistor (Liquid 1)
R8T	Thermistor (Liquid 2)
R9T	Thermistor (Power module)
S1NPH	Pressure sensor (High)
S1NPL	Pressure sensor (Low)
S1PH	Pressure switch (High)
V1R	Power module
V2R-V3R	Diode module
X1M	Terminal strip
X2M	Terminal strip (Control) (C/H selctor)
Y1E	Electronic expansion valve (Main)
Y3E	Electronic expansion valve (Sub cool)
Y1S	Solenoid valve (4 way valve)
Y2S	Solenoid valve (Hot gas)
Y3S	Solenoid valve (U/L circuit)
Z1C	Noise filter
Z2C	Noise filter
Z3C	Noise filter
Z4C	Noise filter
Z1F	Noise filter (With surge absorber)
Z2F	Noise filter
C/H selector	
S1S	Selector switch (Fan/Cool-Heat)
S2S	Selector switch (Cool/Heat)
Connector of option adapter	
X37A	Connector (Option adapter power supply)
Note 4	

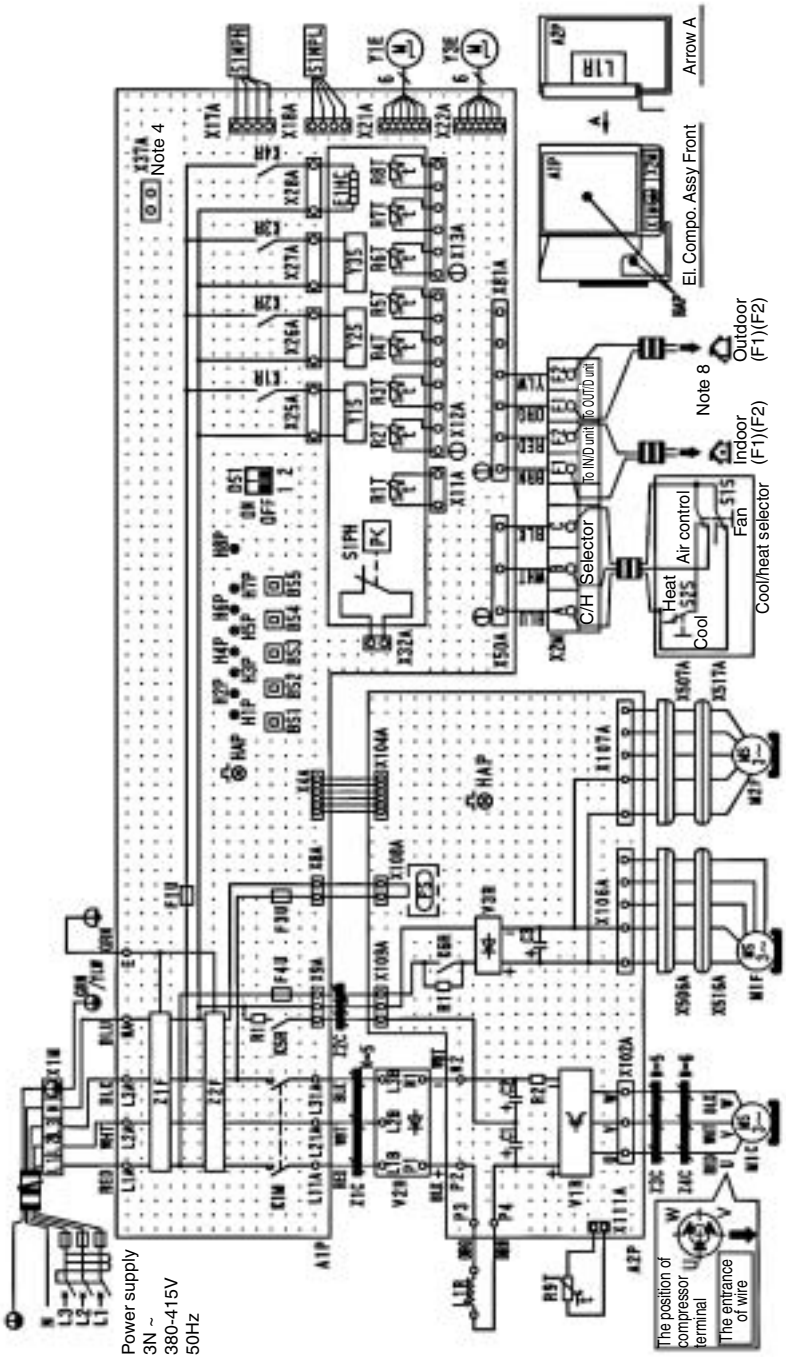

Notes:
1. This wiring diagram is applied to the outdoor unit.
2. ▬ : Field wiring
3. —○— : Terminal strip ▷— : Movable connector ▭, ▯— : Fixed connector
   □□□ : Terminal ⊕ : Protective earth (screw) ⏚, ⏚ : Noiseless earth
4. When using the option adapter, refer to the installation manual
5. Refer to "operation caution label" (on back of front plate)
   How to use BS1~BS5 and DS1 - 2 switch.
6. When operating, don't short circuit for protection device.(S1PH)
7. Colors BLU : Bleu BRN : Brown GRN : Green RED : Red
   WHT : White YLW : Yellow ORG : Orange
8. When using the central control system, connect to outdoor-outdoor transmission to F1-F2.

RXYSQ4 / 5 / 6PA7V1B

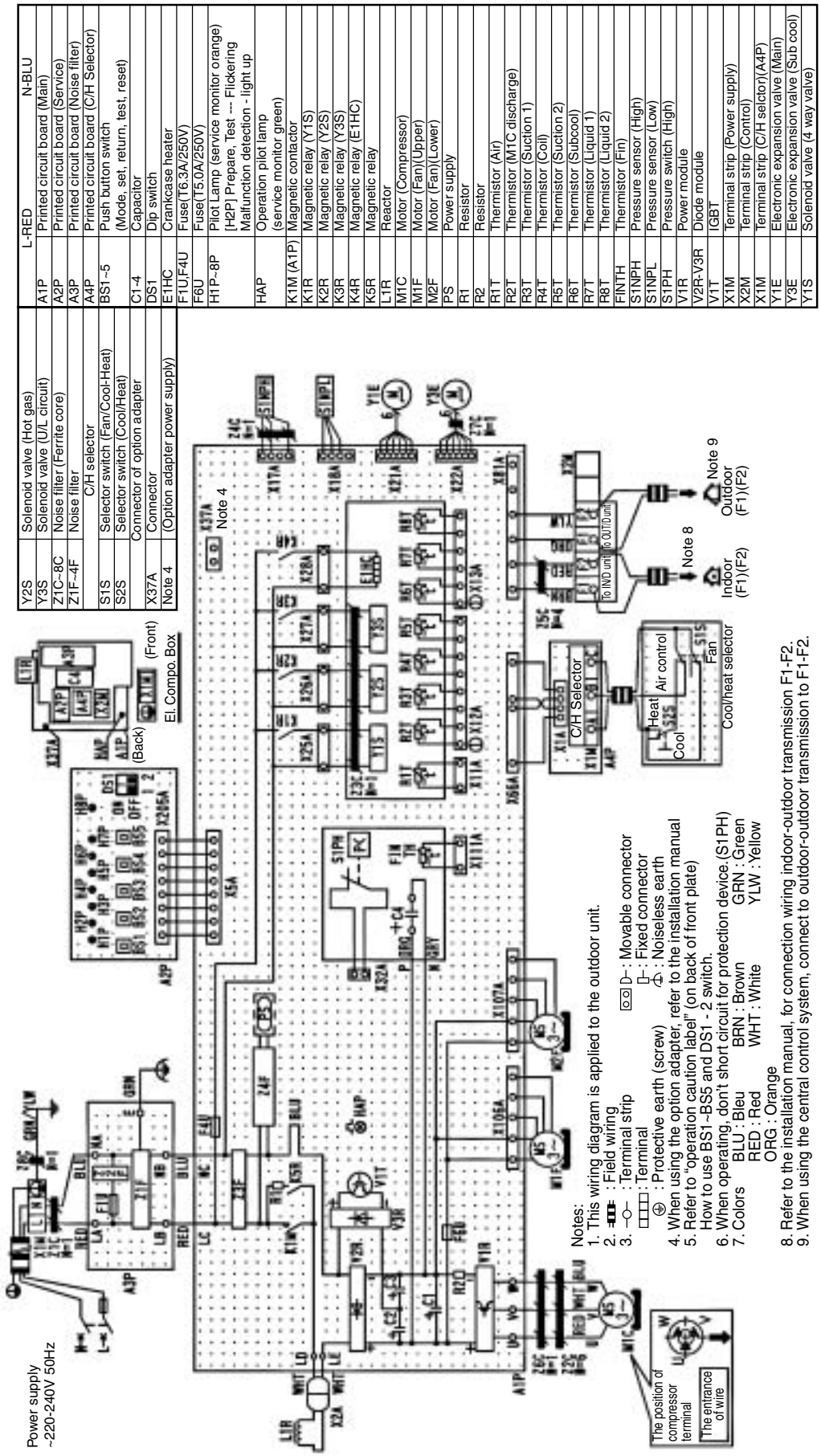

		L-RED N-BLU
Y2S	Solenoid valve (Hot gas)	
Y3S	Solenoid valve (U/L circuit)	
Z1C~8C	Noise filter (Ferrite core)	
Z1F~4F	Noise filter	
	C/H selector	
S1S	Selector switch (Fan/Cool-Heat)	
S2S	Selector switch (Cool/Heat)	
	Connector of option adapter	
X37A	Connector	
Note 4	(Option adapter power supply)	

A1P	Printed circuit board (Main)
A2P	Printed circuit board (Service)
A3P	Printed circuit board (Noise filter)
A4P	Printed circuit board (C/H Selector)
BS1~5	Push button switch (Mode, set, return, test, reset)
C1-4	Capacitor
DS1	Dip switch
E1HC	Crankcase heater
F1U,F4U	Fuse(T6.3A/250V)
F6U	Fuse(T5.0A/250V)
H1P~8P	Pilot Lamp (service monitor orange) [H2P] Prepare, Test --- Flickering Malfunction detection - light up
HAP	Operation pilot lamp (service monitor green)
K1M (A1P)	Magnetic contactor
K1R	Magnetic relay (Y1S)
K2R	Magnetic relay (Y2S)
K3R	Magnetic relay (Y3S)
K4R	Magnetic relay (E1HC)
K5R	Magnetic relay
L1R	Reactor
M1C	Motor (Compressor)
M1F	Motor (Fan)(Upper)
M2F	Motor (Fan)(Lower)
PS	Power supply
R1	Resistor
R2	Resistor
R1T	Thermistor (Air)
R2T	Thermistor (M1C discharge)
R3T	Thermistor (Suction 1)
R4T	Thermistor (Coil)
R5T	Thermistor (Suction 2)
R6T	Thermistor (Subcool)
R7T	Thermistor (Liquid 1)
R8T	Thermistor (Liquid 2)
FINTH	Thermistor (Fin)
S1NPH	Pressure sensor (High)
S1NPL	Pressure sensor (Low)
S1PH	Pressure switch (High)
V1R	Power module
V2R-V3R	Diode module
V1T	IGBT
X1M	Terminal strip (Power supply)
X2M	Terminal strip (Control)
X1M	Terminal strip (C/H selctor)(A4P)
Y1E	Electronic expansion valve (Main)
Y3E	Electronic expansion valve (Sub cool)
Y1S	Solenoid valve (4 way valve)

2.2 Field Wiring

RXYSQ4 / 5 / 6PA7Y1B

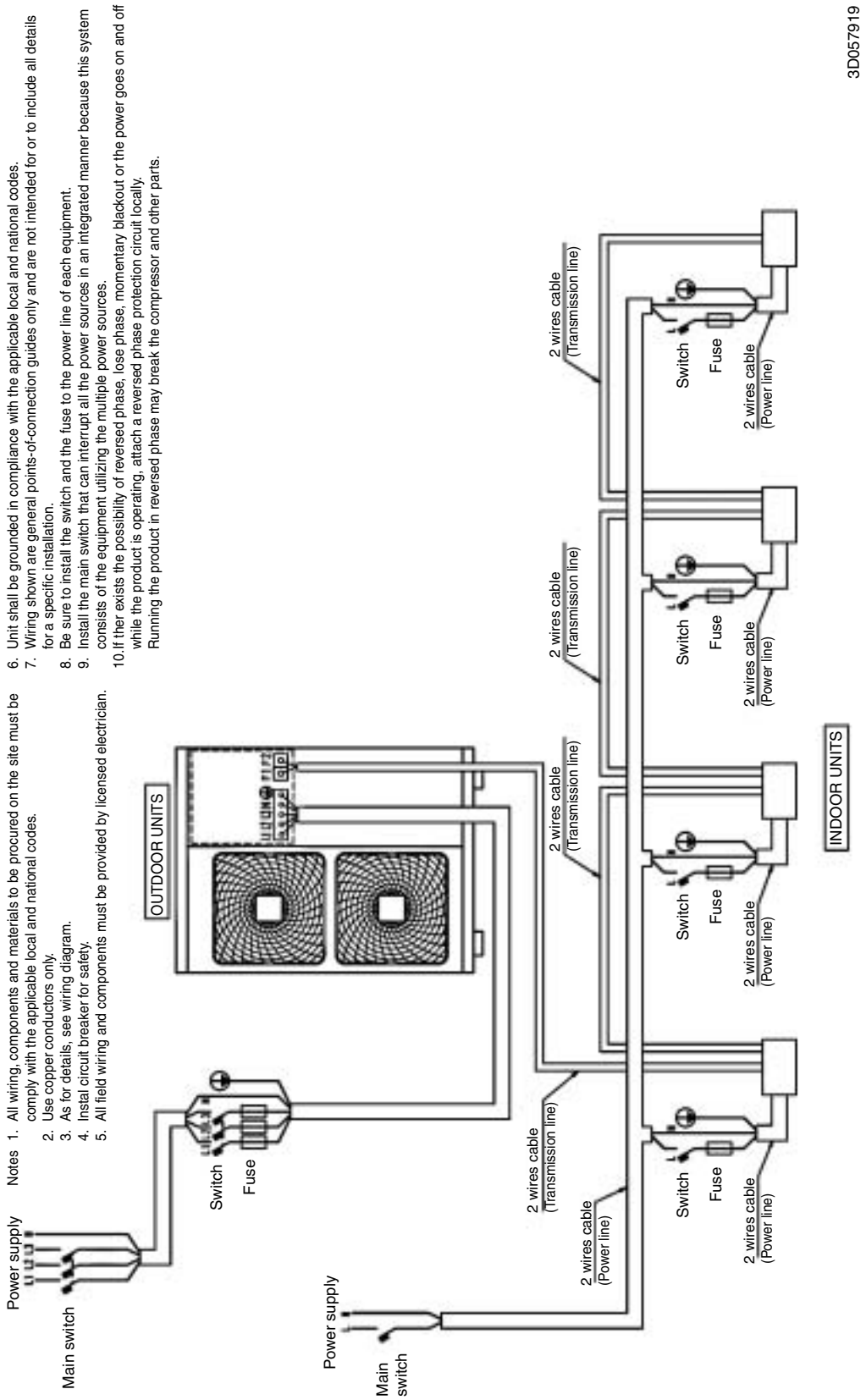

Notes
1. All wiring, components and materials to be procured on the site must be comply with the applicable local and national codes.
2. Use copper conductors only.
3. As for details, see wiring diagram.
4. Instal circuit breaker for safety.
5. All field wiring and components must be provided by licensed electrician.
6. Unit shall be grounded in compliance with the applicable local and national codes.
7. Wiring shown are general points-of-connection guides only and are not intended for or to include all details for a specific installation.
8. Be sure to install the switch and the fuse to the power line of each equipment.
9. Install the main switch that can interrupt all the power sources in an integrated manner because this system consists of the equipment utilizing the multiple power sources.
10. If ther exists the possibility of reversed phase, lose phase, momentary blackout or the power goes on and off while the product is operating, attach a reversed phase protection circuit locally. Running the product in reversed phase may break the compressor and other parts.

RXYSQ4 / 5 / 6PA7V1B

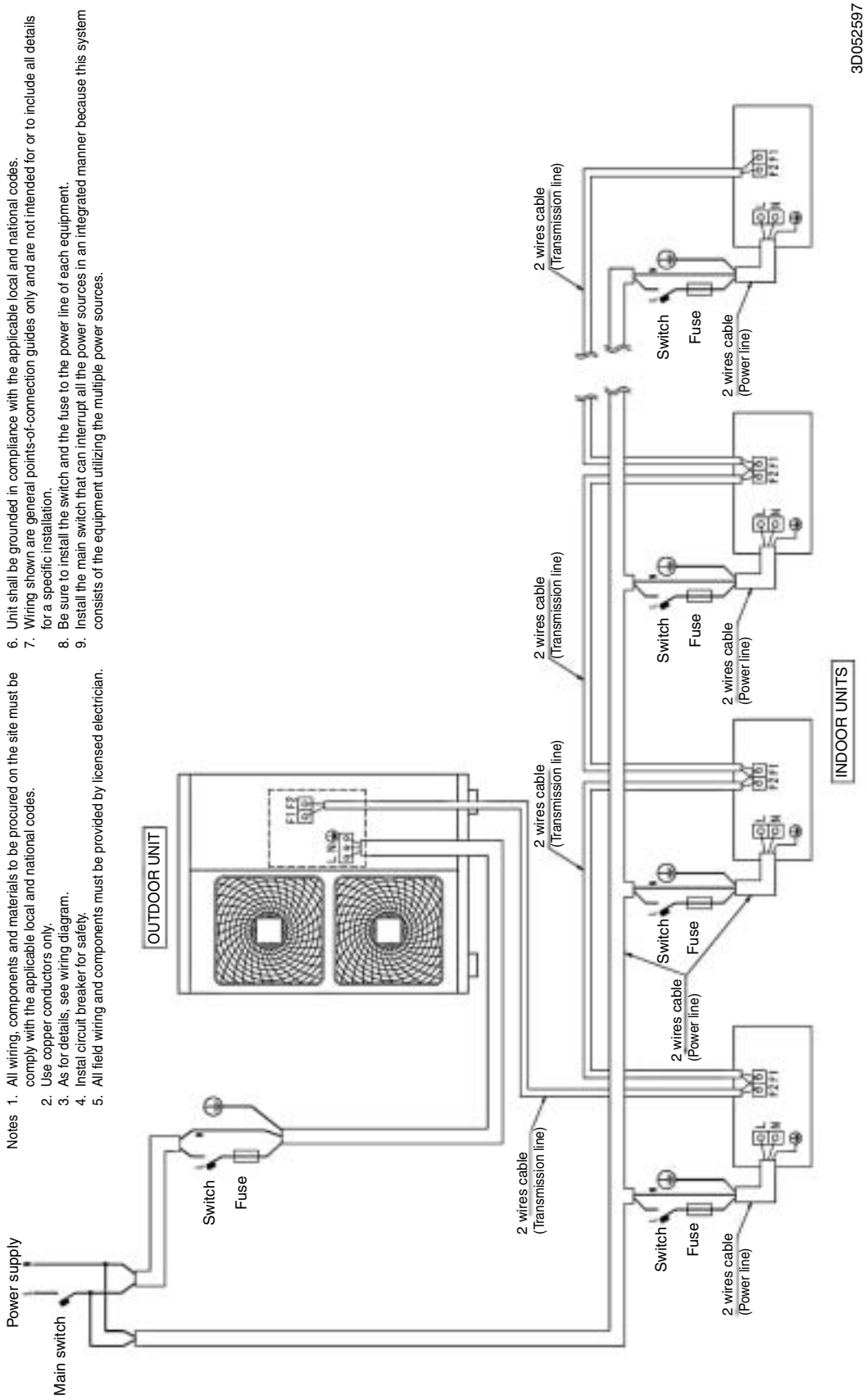

Notes
1. All wiring, components and materials to be procured on the site must be comply with the applicable local and national codes.
2. Use copper conductors only.
3. As for details, see wiring diagram.
4. Instal circuit breaker for safety.
5. All field wiring and components must be provided by licensed electrician.
6. Unit shall be grounded in compliance with the applicable local and national codes.
7. Wiring shown are general points-of-connection guides only and are not intended for or to include all details for a specific installation.
8. Be sure to install the switch and the fuse to the power line of each equipment.
9. Install the main switch that can interrupt all the power sources in an integrated manner because this system consists of the equipment utilizing the multiple power sources.

2.3 Indoor Unit

FXCQ20M / 25M / 32M / 63MV3

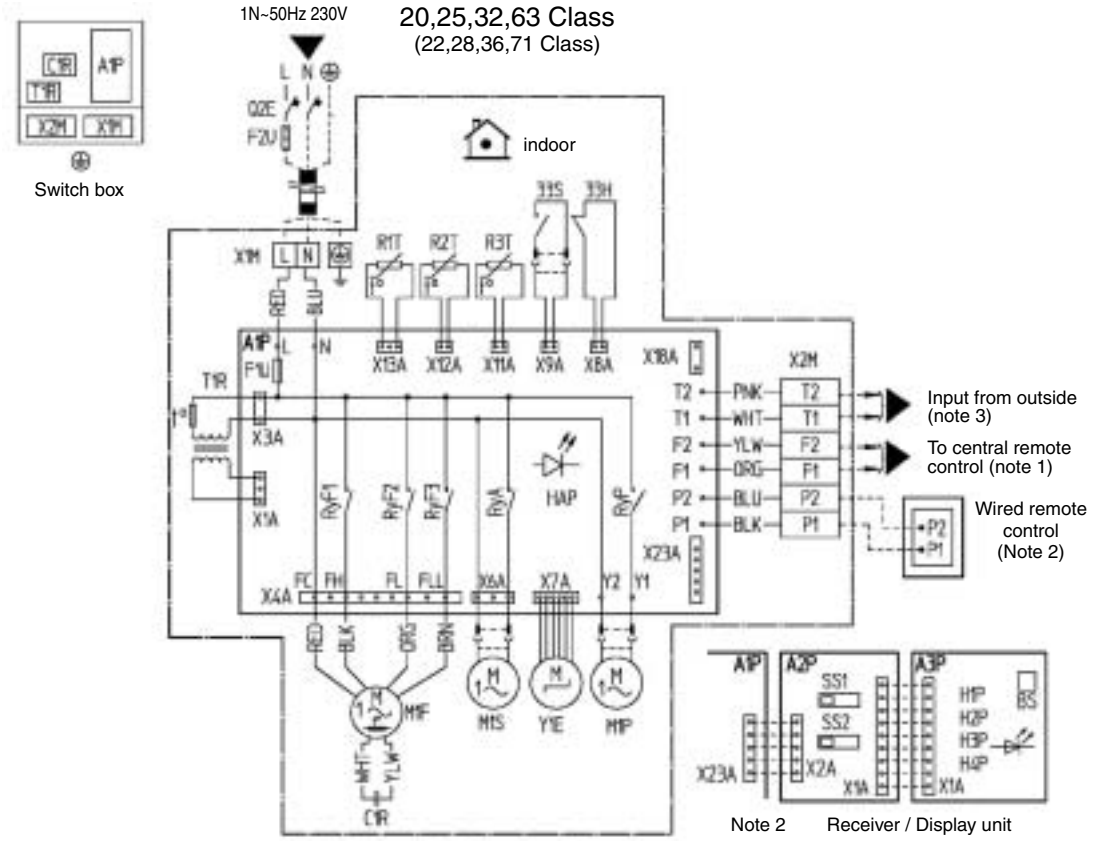

	Field wiring	Colors	BLK : Black
L	Live		BLU : Blue
N	Neutral		BRN : Brown
	Connector		ORG : Orange
○	Wire clamp		PNK : Pink
⏚	Protective earth (screw)		RED : Red
			WHT : White
			YLW : Yellow

33H	Float switch	R2T, R3T	Thermistor (Coil)	H1P	Light emitting diode (On-Red)
33S	Limit switch (swing flap)	Q2E	Earth leak detector	H2P	Light emitting diode (Timer-Green)
A1P	Printed circuit board	RyA	Magnetic relay (M1S)	H3P	Light emitting diode (Filter sign-Red)
C1R	Capacitor (M1F)	RyF1-3	Magnetic relay (M1F)	H4P	Light emitting diode (Defrost-Orange)
F1T	Thermal fuse (152°C) (M1F embedded)	RyP	Magnetic relay (M1P)	SS1	Selector switch (Main/Sub)
F1U	Fuse (250V, 5A)	T1R	Transformer (220-240V/22V)	SS2	Selector switch (Wireless adress set)
F2U	Field fuse	X1M	Terminal strip (Power)	Connector for optional parts	
HAP	Light emitting diode	X2M	Terminal strip (Control)	X18A	Connector
	(Service monitor-Green)	Y1E	Electronic expansion valve		(Wiring, adapter for electrical appendices)
M1F	Motor (Indoor fan)	Receiver/Display unit		X23A	Connector (infrared remote control)
M1S	Motor (Swing flap)	(Attached to infrared remote control)			
M1P	Motor (Drain pump)	A2P, A3P	Printed circuit board		
R1T	Thermistor (Air)	BS	ON/OFF button		

Notes
1. When using a central remote control, see manual for connection to the unit.
2. X23A is connected when the Infrared remote control kit is used.
3. When connecting the input wires from the outdoor unit, “forced off” or “on/off” operation can be selected by the remote control. For more details see installation manual.
4. Use copper conductors only.

2TW23776-1D

FXCQ40M / 50M / 80M / 125MV3

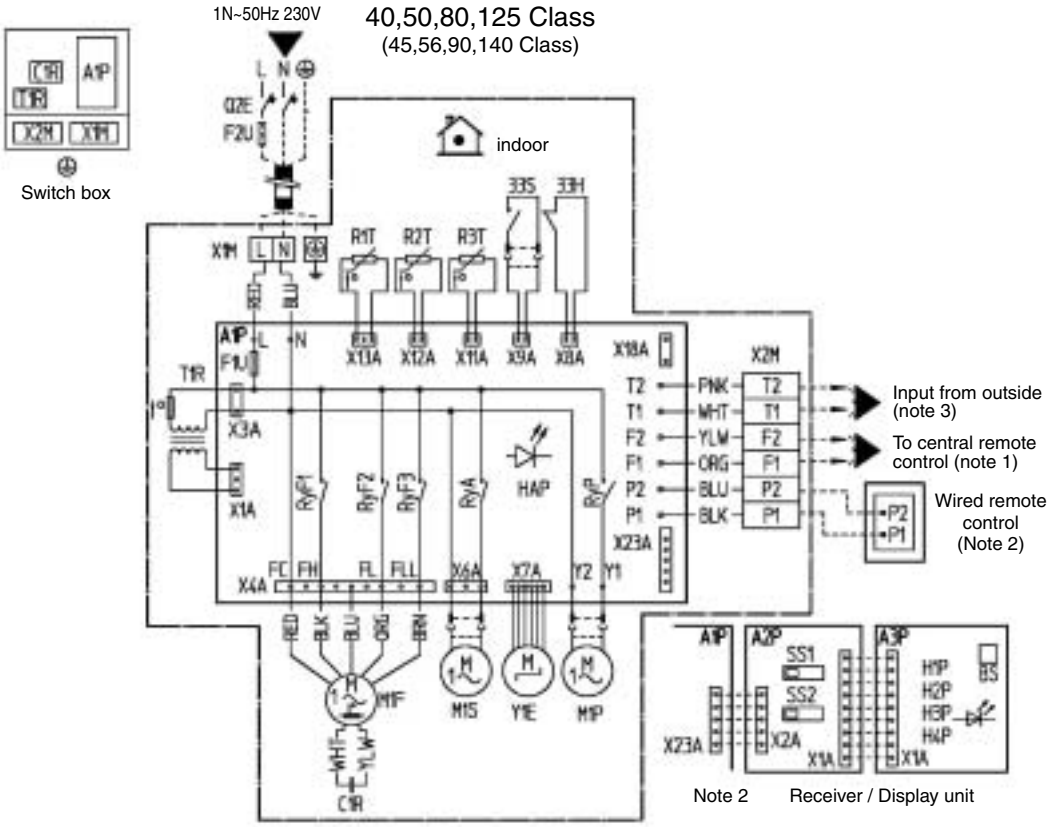

	Field wiring	Colors	BLK : Black
L	Live		BLU : Blue
N	Neutral		BRN : Brown
	Connector		ORG : Orange
○	Wire clamp		PNK : Pink
⏚	Protective earth (screw)		RED : Red
			WHT : White
			YLW : Yellow

33H	Float switch	R2T, R3T	Thermistor (Coil)	H1P	Light emitting diode (On-Red)
33S	Limit switch (swing flap)	Q2E	Earth leak detector	H2P	Light emitting diode (Timer-Green)
A1P	Printed circuit board	RyA	Magnetic relay (M1S)	H3P	Light emitting diode (Filter sign-Red)
C1R	Capacitor (M1F)	RyF1-3	Magnetic relay (M1F)	H4P	Light emitting diode (Defrost-Orange)
F1T	Thermal fuse (152°C) (M1F embedded)	RyP	Magnetic relay (M1P)	SS1	Selector switch (Main/Sub)
F1U	Fuse (250V, 5A)	T1R	Transformer (220-240V/22V)	SS2	Selector switch (Wireless adress set)
F2U	Field fuse	X1M	Terminal strip (Power)	Connector for optional parts	
HAP	Light emitting diode	X2M	Terminal strip (Control)	X18A	Connector
	(Service monitor-Green)	Y1E	Electronic expansion valve		(Wiring, adapter for electrical appendices)
M1F	Motor (Indoor fan)	Receiver/Display unit		X23A	Connector (infrared remote control)
M1S	Motor (Swing flap)	(Attached to infrared remote control)			
M1P	Motor (Drain pump)	A2P, A3P	Printed circuit board		
R1T	Thermistor (Air)	BS	ON/OFF button		

Notes
1. When using a central remote control, see manual for connection to the unit.
2. X23A is connected when the infrared remote control kit is used.
3. When connecting the input wires from the outdoor unit, “forced off” or “on/off” operation can be selected by the remote control. For more details see installation manual.
4. Use copper conductors only.

2TW23806-1D

FXFQ20P / 25P / 32P / 40P / 50P / 63P / 80P / 100P / 125P7VE

20~125-Class (22~140 Class)

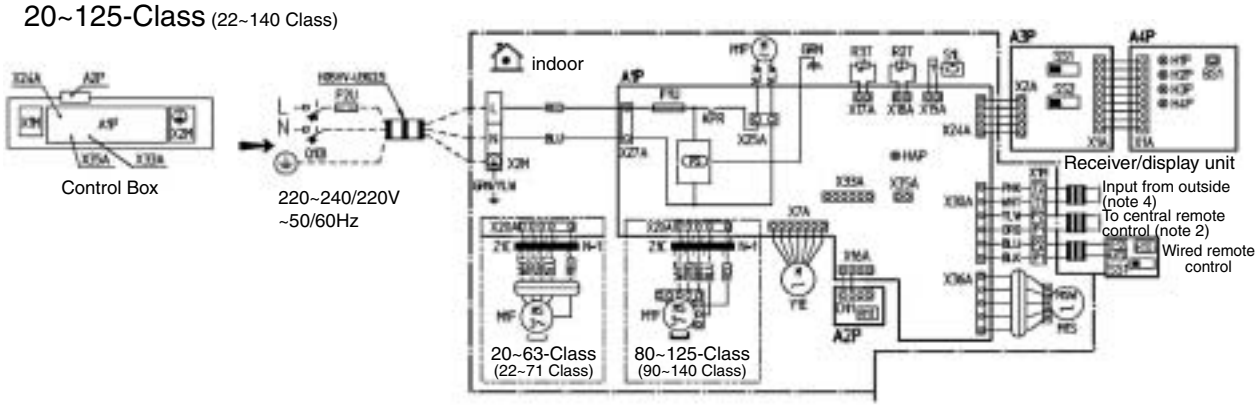

Indoor unit		M1S	Motor (Swing flap)	**Reciever/display unit (Attached to infrared remote control)**		SS2	Selector switch (Wireless adress set)
A1P	Printed circuit board	PS	Power supply circuit				
A2P	Printed circuit board	Q1DI	Earth leak detector	A3P	Printed circuit board	**Connector for optional parts**	
C1	Capacitor	R1T	Thermistor (Air)	A4P	Printed circuit board	X24A	Connector (infrared remote control)
F1U	Fuse (T, 5A, 250V)	R2T	Thermistor (Coil)	BS1	Push button (on/off)		
F2U	Field Fuse	R3T	Thermistor (Header)	H1P	Light emitting diode (on-red)	X33A	Connector (adapter for wiring)
HAP	Light emitting diode (Service monitor green)	S1L	Float switch	H2P	Light emitting diode (timer-green)	X35A	Connector (group control adapter)
		X1M	Terminal strip	H3P	Light emitting diode (filter sign-red)	**Wired remote control**	
KPR	Magnetic relay (M1P)	X2M	Terminal strip	H4P	Light emitting diode (defrost-orange)	R1T	Thermistor (air)
L1	Coil	Y1E	Electronic expansion valve			SS1	Selector switch (main/sub)
M1F	Motor (Indoor fan)	Z1C	Ferrite core	SS1	Selector switch (main/sub)		
M1P	Motor (Drain pump)						

Notes:

1. Terminal Connector Field wiring
2. In case of using a central remote control, connect it to the unit in accordance with the attached installation manual.
3. X24A, X33A and X35A are connected when the optional accessories are being used.
4. When connecting the input wires from outside, forced off or on/off control operation can be selected by the remote control
5. Confirm the method of setting the selector switch (SS1,SS2) by installation manual end engineering data, etc.
6. Colour legend: RED : Red, BLK : Black, WHT : White, YLW : Yellow, GRN : Green, ORG : Orange, BRN : Brown, GRY : Grey, BLU : Blue, PNK : Pink

3TW28836-1B

FXZQ20M / 25M / 32M / 40M / 50MV1

20,25,32,40,50 Class
(22,28,36,45,56 Class)

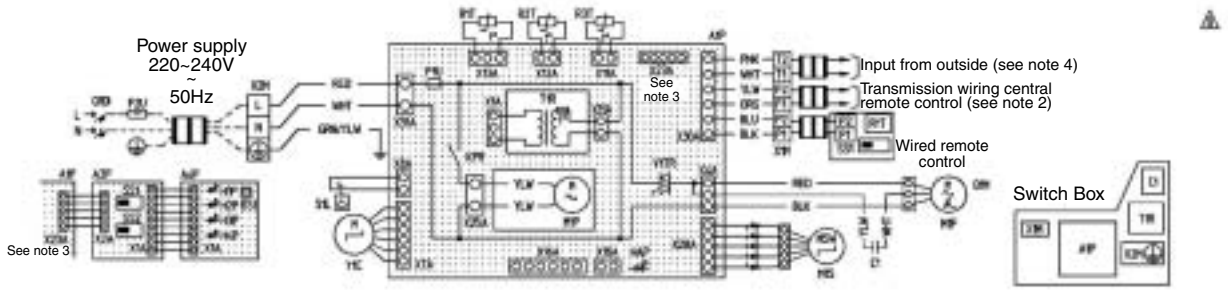

	Indoor unit	Q1M	Thermal protector	Wired remote control		SS1	Selector switch (main/sub)
A1P	Printed circuit board		(M1F embedded)	R1T	Thermistor (air)	SS2	Selector switch
C1	Capacitor	R1T	Thermistor (Air)	SS1	Selector switch (Main/sub)		(Wireless adress set)
F1U	Fuse (B, 5A, 250V)	R2T	Thermistor (Coil-liquid)	Wireless remote control		Connector for optional parts	
F2U	Field Fuse	R3T	Thermistor (Coil-gas)	(Reciever/display unit)		X16A	Connector (adapter for wire)
HAP	Light emitting diode	S1L	Float switch	A3P	Printed circuit board	X18A	Connector (on/off)
	(Service monitor green)	T1R	Transformer (220-240V/22V)	A4P	Printed circuit board		(Wiring adapter for electrical
KPR	Magnetic relay (M1P)	V1TR	Triac	BS1	Push button (on/off)		appendices)
M1F	Motor (Indoor fan)	X1M	Terminal strip	H1P	Light emitting diode (on-red)		
M1P	Motor (Drain pump)	X2M	Terminal strip	H2P	Light emitting diode (timer-green)		
M1S	Motor (Swing flap)	Y1E	Electronic expansion valve	H3P	Light emitting diode (filter sign-red)		
Q1DI	Earth leak detector (Max. 300mA)			H4P	Light emitting diode (defrost-orange)		

Terminal
Connector
Wire clamp
Field wiring

Colors
RED : Red
BLK : Black
WHT : White
YLW : Yellow
PNK : Pink
ORG : Orange
GRN : Green
BLU : Blue

Notes:
1. In case of using a remote control, connect it to the unit in accordance with the attached installation manual.
2. X23A is connected when the wireless remote control is being used.
3. When connecting the input wires from outside, forced off or on/off control operation can be selected by the remote control
4. Remote control model varies according to the combination system.
   See technical data and catalogs, etc. before connecting

3TW28826-1B

FXKQ25MA / 32MA / 40MA / 63MAVE

3D039564C-1

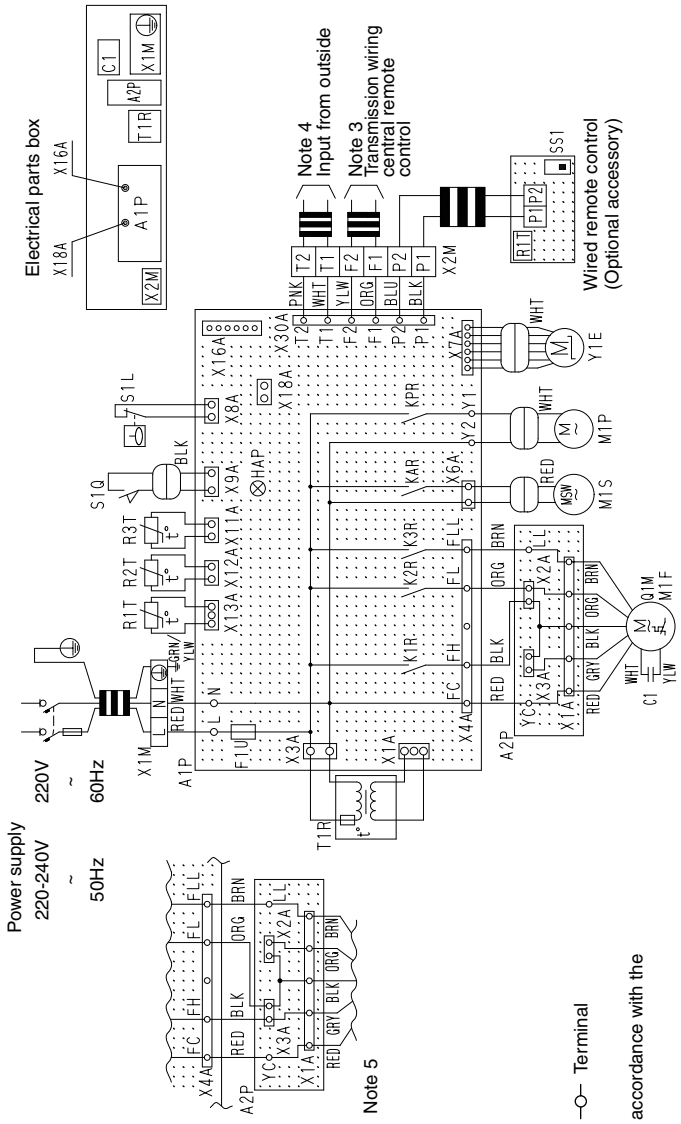

Indoor unit		R1T	Thermistor (Air)
A1P	Printed circuit board	R2T-R3T	Thermistor (coil)
A2P	Terminal board	S1L	Float switch
C1	capacitor (M1F)	S1Q	Limit switch (swing flap)
F1U	Fuse (B, 5A,250V)	T1R	Transformer (220-240V/22V)
HAP	Light emitting diode (service monitor-green)	X1M	Terminal block (Power)
		X2M	Terminal block (Control)
K1R-K3R	Magnetic relay (M1F)	Y1E	Electronic expansion valve
KAR	Magnetic relay (M1S)		
KPR	Magnetic relay (M1P)	Wired remote control	
M1F	Motor (indoor fan)	R1T	Thermistor (Air)
M1P	Motor (drain pump)	SS1	Selector switch (Main/sub)
M1S	Motor (swing flap)	Connector for optional parts	
Q1M	Thermo switch (M1F embedded)	X16A	Connector (adapter for wiring)
		X18A	Connector (wiring adapter for electrical appandices)

Notes
1. Terminal block
2. Field wiring
3. In case using central remote control, connect it to the unit in accordance with the attached instruction manual.
4. When connecting the input wires from outside, forced off or on/off control operation can be selected by remote control.
   In details, refer to the installation manual attached the unit.
5. In case high ESP operation, change over the wiring connection from X2A to X3A.
6. Symbols show as follows
   PNK : Pink WHT : White YLW : Yellow ORG : Orange BLU : Blue
   BLK : Black RED : Red BRN : Brown GRY : Grey
7. Use copper conductors only.

Connector
Terminal

FXDQ20P / 25P / 32P
FXDQ40NA / 50NA / 63NAVE (with Drain Pump)

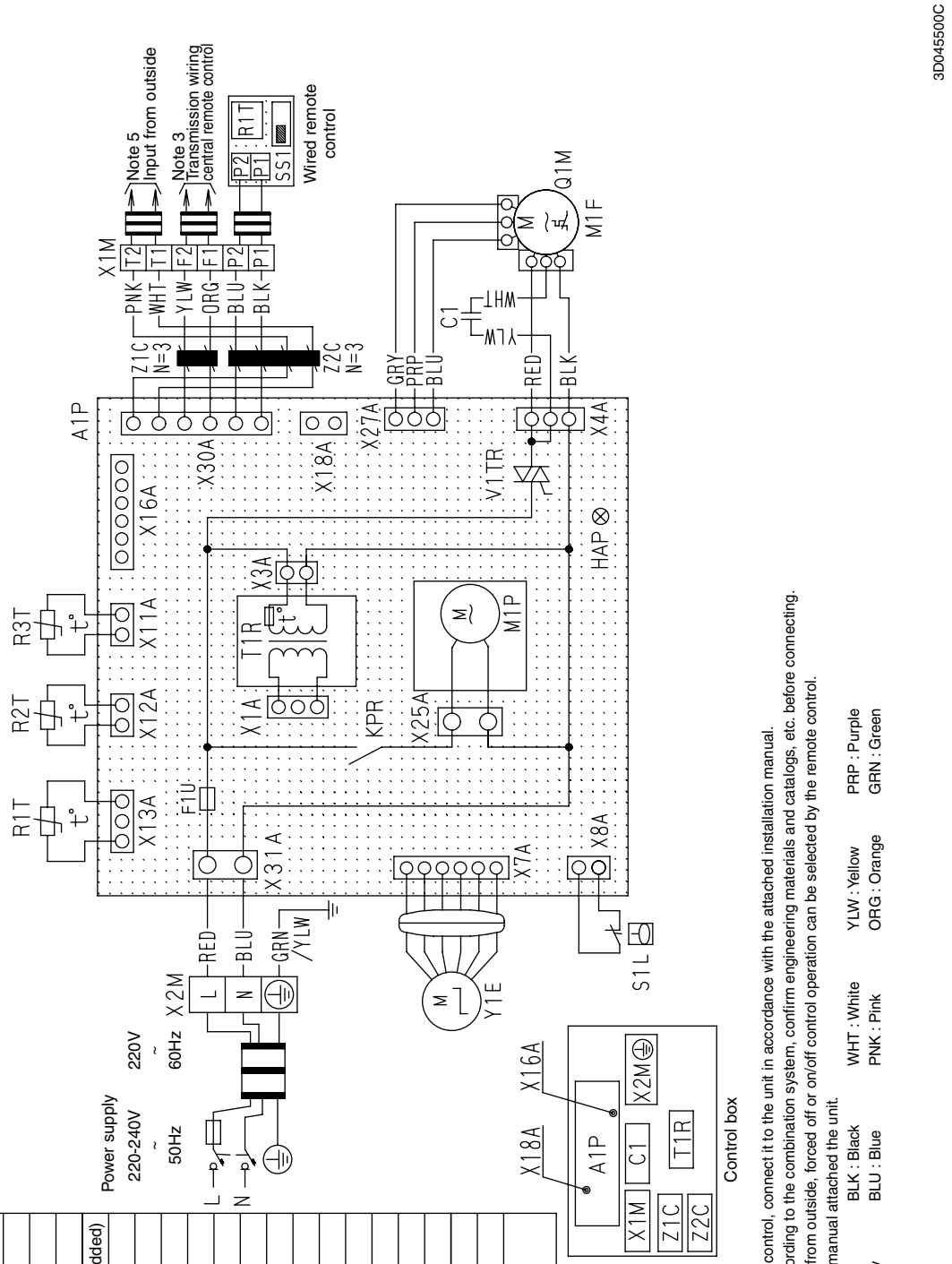

A1P	Printed circuit board
C1	Capacitor (M1F)
F1U	Fuse (F5A/250V)
HAP	Light emitting diode (Service monitor green)
KPR	Magnetic relay (M1P)
M1F	Motor (Indoor fan)
M1P	Motor (Drain pump)
Q1M	Thermal protector (M1F embedded)
R1T	Thermistor (Air)
R2T	Thermistor (Coil - 1)
R3T	Thermistor (Coil - 2)
S1L	Float switch
T1R	Transformer (220/22V)
V1TR	Phase control circuit
X1M	Terminal block
X2M	Terminal block
Y1E	Electronic expansion valve
Z1C-Z2C	Noise filter (Ferrite core)
	Wired remote control
R1T	Thermistor (Air)
SS1	Selector switch (Main/Sub)
	Connector for optional parts
X16A	Connector (adapter for wiring)
X18A	Connector (wiring adapter for electrical appendices)

Notes:
1. Terminal / Connector / Field wiring
2. In case of using a central remote control, connect it to the unit in accordance with the attached installation manual.
3. Remote control model varies according to the combination system, confirm engineering materials and catalogs, etc. before connecting.
4. When connecting the input wires from outside, forced off or on/off control operation can be selected by the remote control. In details, refer to the installation manual attached the unit.
5. Colour legend:

RED : Red	BLK : Black	WHT : White	YLW : Yellow	PRP : Purple	
GRY : Grey	BLU : Blue	PNK : Pink	ORG : Orange	GRN : Green	

FXDQ20M8 / 25M8V3

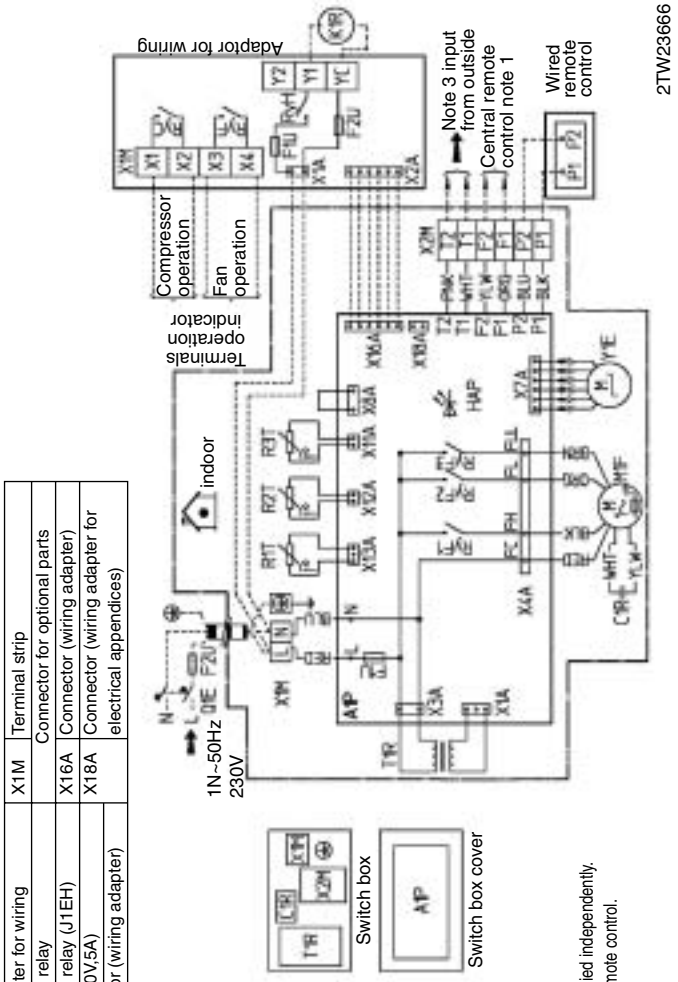

A1P	Printed circuit board	RyF1-3	Magnetic relay (Fan)	Adapter for wiring	X1M	Terminal strip
C1R	Capacitor (Fan)	T1R	Transformer (220-240V/22V)	RyC,RyF Magnetic relay		Connector for optional parts
F1U	Fuse (250V, 10A)			RyH Magnetic relay (J1EH)	X16A	Connector (wiring adapter)
F2U	Field Fuse	X1M	Terminal strip (Power)	F1U,F2U Fuse (250V,5A)	X18A	Connector (wiring adapter for electrical appendices)
HAP	Light emitting diode (Service monitor green)	X2M	Terminal strip (Control)	X1A,X2A Connector (wiring adapter)		
		Y1E	Electronic expansion valve			
M1F	Motor (Fan)		Optional parts			
Q1E	Earth leak detector					
R1T	Thermistor (Air)	J1EH	Electric heater			
R2T, R3T	Thermistor (Refrigerant)	K1R	Magnetic relay (J1EH)			

Switch box

Switch box cover

	Field wiring	Colors	BLK : Black
L	Live		BLU : Blue
N	Neutral		BRN : Brown
	Connector		ORG : Orange
	Wire clamp		PNK : Pink
	Protective earth (screw)		RED : Red
			WHT : White
			YLW : Yellow

Notes
1. Use copper conductors only.
2. When using a central remote control, see manual for connection to the unit.
3. When installing the electric heater, change the wiring for the heater circuit, the main power supply has to be supplied independently.
4. When connecting the input wires from the outdoor unit, “forced off” or “on/off” operation can be selected by the remote control.
   For more details see installation manual.

FXSQ20M / 25M / 32M / 40M / 50M / 63M8V3

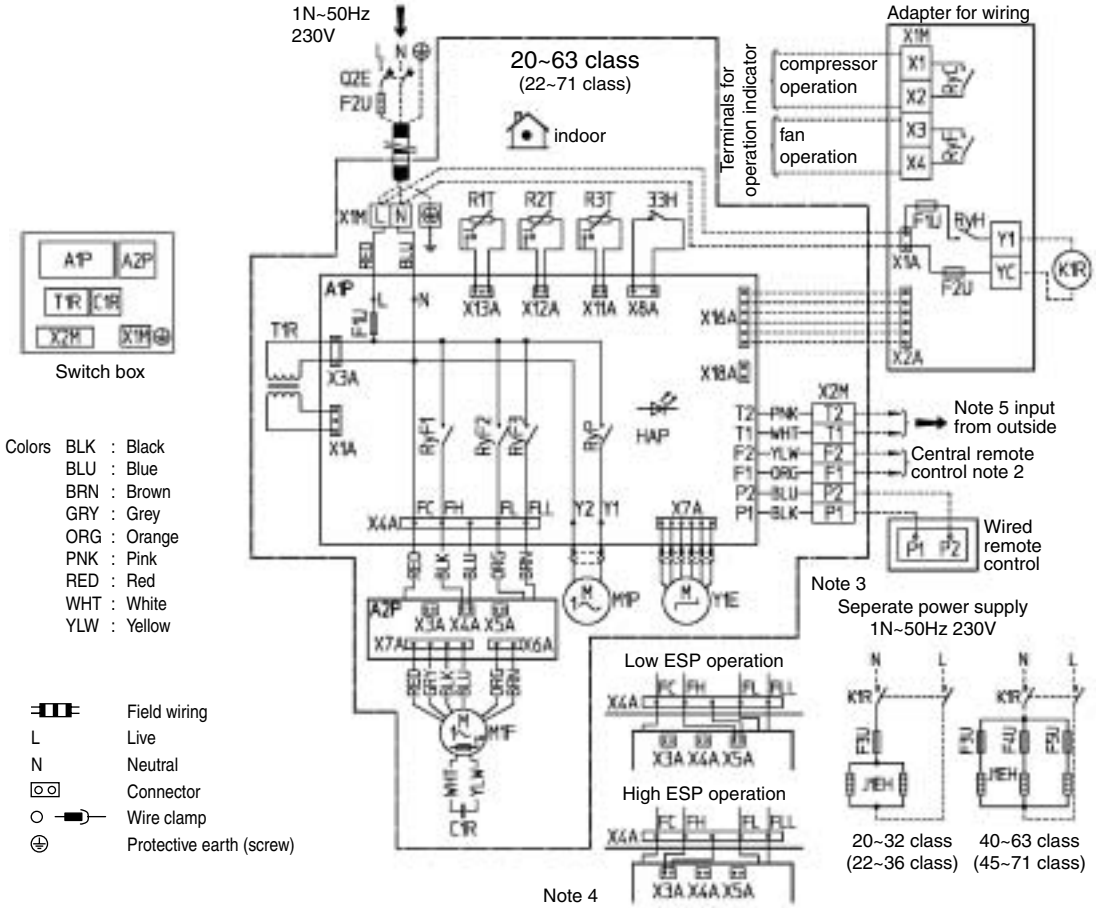

33H	Float switch	R1T	Thermistor (Air)	K1R	Magnetic relay (J1EH)
A1P	Printed circuit board	R2T, R3T	Thermistor (Refrigerant)	Adapter for wiring	
A2P	Terminal board	RyF1-3	Magnetic relay (Fan)	RyC,RyF	Magnetic relay
C1R	Capacitor (Fan)	RyP	Magnetic relay (Drain pump)	RyH	Magnetic relay (J1EH)
F1U	Fuse (250V, 5A)	T1R	Transformer (220-240V/22V)	F1U, F2U	Fuse (250V, 5A)
F2U	Field fuse	X1M	Terminal strip (Power)	X1A,X2A	Connector (wiring adapter)
HAP	Light emitting diode	X2M	Terminal strip (Control)	X1M	Terminal strip
	(Service monitor-Green)	Y1E	Electronic expansion valve	Connector for optional parts	
M1F	Motor (Indoor fan)	Optional parts		X16A	Connector (Wiring adapter)
M1P	Motor (Drain pump)	F3-5U	Fuse (250, 16A)	X18A	Connector
Q2E	Earth leak detector	J1EH	Electric heater		(Wiring adapter for electrical appendices)

Notes
1. Use copper conductors only.
2. When using a central remote control, see manual for connection to the unit.
3. When installing the electric heater change the wiring for the heater circuit. The main power supply has to be supplied independently.
4. For High or Low ESP operation, change the wiring connection of X4A as shown on the wiring diagram.
5. When connecting the input wires from the outdoor unit, “forced off” or “on/off” operation can be selected by the remote control.
   For more details see installation manual.

2TW23686-1C

FXSQ80M / 100M / 125M8V3

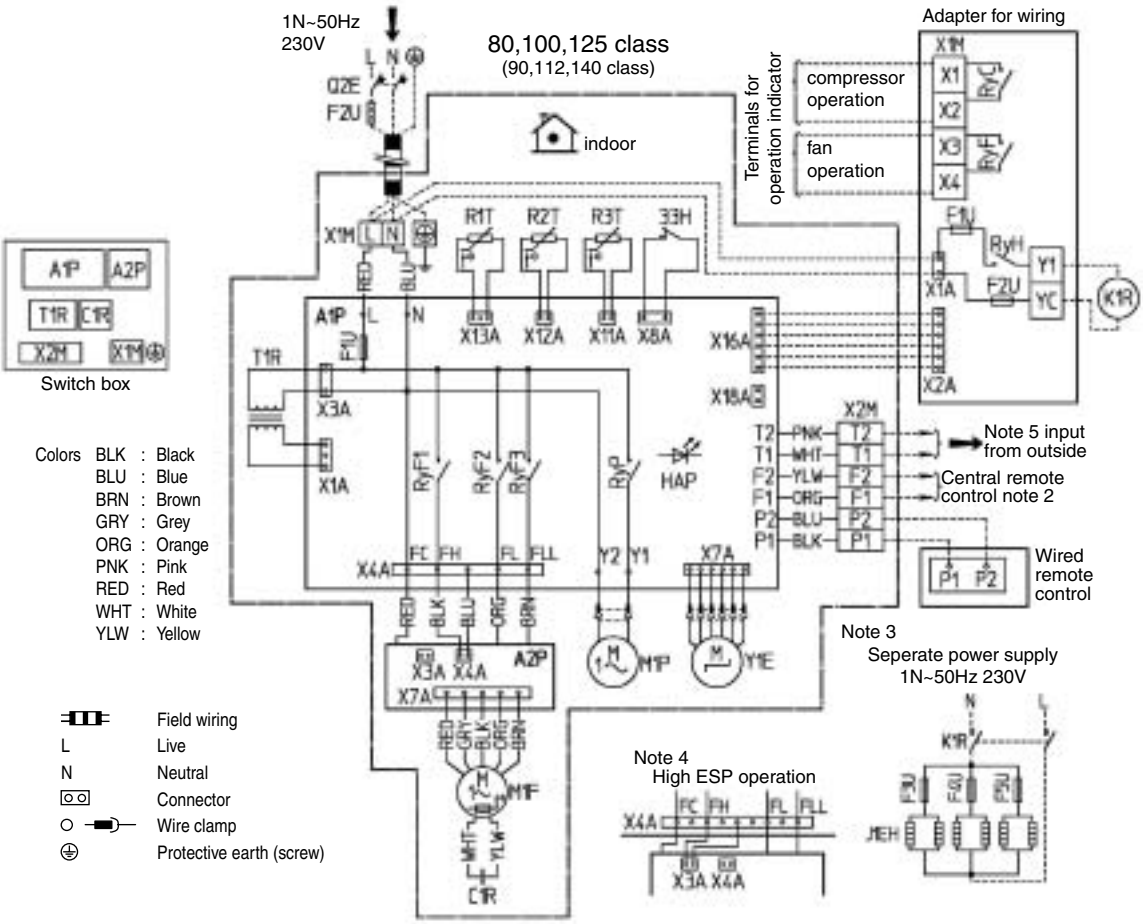

33H	Float switch	R1T	Thermistor (Air)	K1R	Magnetic relay (J1EH)
A1P	Printed circuit board	R2T, R3T	Thermistor (Refrigerant)	Adapter for wiring	
A2P	Terminal board	RyF1-3	Magnetic relay (Fan)	RyC,RyF	Magnetic relay
C1R	Capacitor (Fan)	RyP	Magnetic relay (Drain pump)	RyH	Magnetic relay (J1EH)
F1U	Fuse (250V, 10A)	T1R	Transformer (220V/27V)	F1U, F2U	Fuse (250V, 5A)
F2U	Field fuse	X1M	Terminal strip (Power)	X1A,X2A	Connector (wiring adapter)
HAP	Light emitting diode	X2M	Terminal strip (Control)	X1M	Terminal strip
	(Service monitor-Green)	Y1E	Electronic expansion valve	Connector for optional parts	
M1F	Motor (Fan)	Optional parts		X16A	Connector (Wiring adapter)
M1P	Motor (Drain pump)	F3-5U	Fuse (250V, 16A)	X18A	Connector
Q2E	Earth leak detector	J1EH	Electric heater		(Wiring, adapter for electrical appendices)

Notes
1. Use copper conductors only.
2. When using a central remote control, see manual for connection to the unit.
3. When installing the electric heater change the wiring for the heater circuit. The main power supply has to be supplied independently.
4. For High ESP operation, change the wiring connection of X4A as shown on the wiring diagram.
5. When connecting the input wires from the outdoor unit, “forced off” or “on/off” operation can be selected by the remote control.
For more details see installation manual.

2TW23636-1C

FXMQ40P / 50P / 63P / 80P / 100P / 125PVE

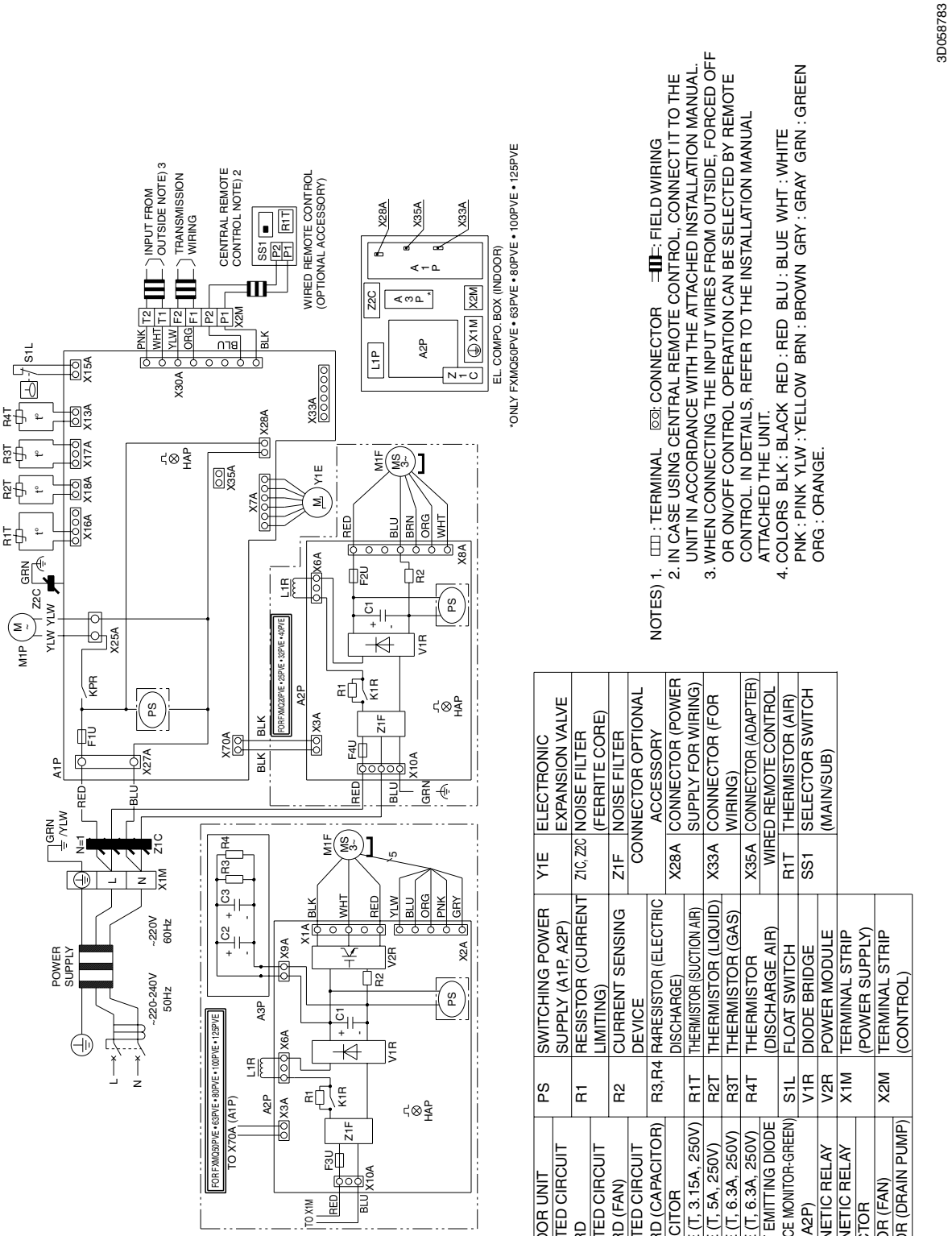

INDOOR UNIT		PS	SWITCHING POWER SUPPLY (A1P, A2P)	Y1E	ELECTRONIC EXPANSION VALVE
A1P	PRINTED CIRCUIT BOARD	R1	RESISTOR (CURRENT LIMITING)	Z1C, Z2C	NOISE FILTER (FERRITE CORE)
A2P	PRINTED CIRCUIT BOARD (FAN)	R2	CURRENT SENSING DEVICE	Z1F	NOISE FILTER
A3P	PRINTED CIRCUIT BOARD (CAPACITOR)	R3,R4	R4RESISTOR (ELECTRIC DISCHARGE)		CONNECTOR OPTIONAL ACCESSORY
C1, C2, C3	CAPACITOR			X28A	CONNECTOR (POWER SUPPLY FOR WIRING)
F1U	FUSE (T, 3.15A, 250V)	R1T	THERMISTOR (SUCTION AIR)	X33A	CONNECTOR (FOR WIRING)
F2U	FUSE (T, 5A, 250V)	R2T	THERMISTOR (LIQUID)		
F3U	FUSE (T, 6.3A, 250V)	R3T	THERMISTOR (GAS)	X35A	CONNECTOR (ADAPTER)
F4U	FUSE (T, 6.3A, 250V)	R4T	THERMISTOR (DISCHARGE AIR)		WIRED REMOTE CONTROL
HAP	LIGHT EMITTING DIODE (SERVICE MONITOR-GREEN) (A1P, A2P)	S1L	FLOAT SWITCH	R1T	THERMISTOR (AIR)
		V1R	DIODE BRIDGE	SS1	SELECTOR SWITCH (MAIN/SUB)
K1R	MAGNETIC RELAY	V2R	POWER MODULE		
K1R	MAGNETIC RELAY	X1M	TERMINAL STRIP (POWER SUPPLY)		
L1R	REACTOR				
M1F	MOTOR (FAN)	X2M	TERMINAL STRIP (CONTROL)		
M1P	MOTOR (DRAIN PUMP)				

FXHQ32MA / 63MA / 100MAVE

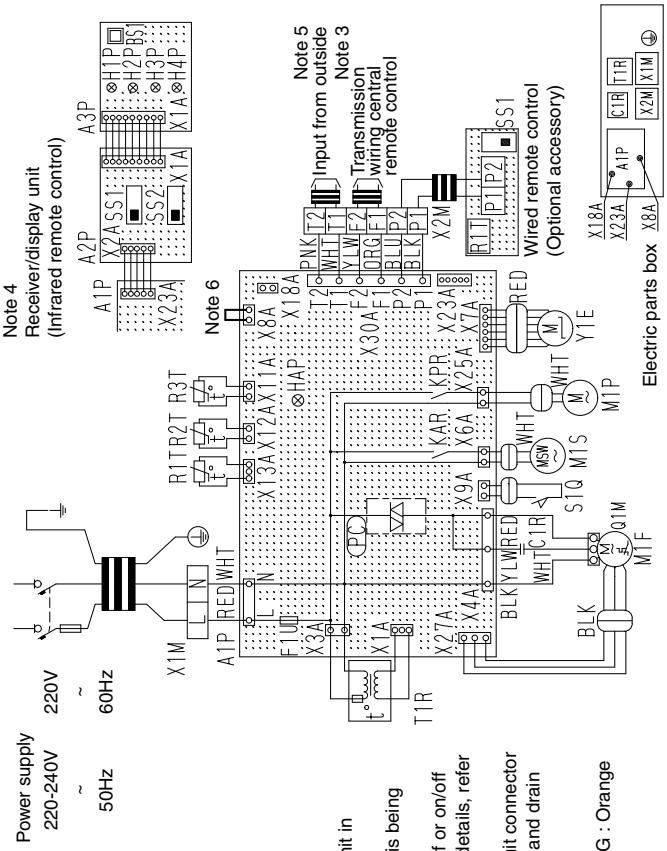

3D039801D

Indoor unit		H3P	Light emitting diode (Filter sign-red)
A1P	Printed circuit board	H4P	Light emitting diode (Defrost-orange)
C1R	Capacitor (M1F)	SS1	Selector switch (Main/sub)
F1U	Fuse (B, 5A, 250V)	SS2	Selector switch (wireless adress set)
HAP	Light emitting diode (Service monitor-green)	Connector for optional parts	
KAR	Magnetic relay (M1S)	X8A	Connector (Float switch)
KPR	Magnetic relay (M1P)	X18A	Connector (Wiring adapter for electrical appendices)
M1F	Motor (Indoor fan)	X23A	Connector (infrared remote control)
M1S	Motor (Swing flap)		
Q1M	Thermo switch (M1F embedded)		
R1T	Thermistor (Air)		
R2T	Thermistor (Coil liquid)		
R3T	Thermistor (Coil gas)		
S1Q	Limit switch (Swing flap)		
T1R	Transformer (220240/22V)		
X1M	Terminal block (Power)		
X2M	Terminal block (Control)		
Y1E	Electronic expansion valve		
PC	Phase control circuit		
Optional parts			
M1P	Motor (drain pump)		
Wired remote control			
R1T	Thermistor (Air)		
SS1	Selector switch (Main/sub)		
Receiver/display unit (attached to infrared remote control)			
A2P	Printed circuit board		
A3P	Printed circuit board		
BS1	Push button (On/off)		
H1P	Light emitting diode (on-red)		
H2P	Light emitting diode (timer-green)		

Notes:

1. ▭▭▭: Terminal block ▭▭ D–: Connector
2. ▬▬▬: Field wiring
3. In case using central remote control, connect it to the unit in accordance with the attached instruction manual.
4. X23A is connected when the infrared remote control kit is being used.
5. When connecting the input wires from outside, forced off or on/off control operation can be selected by remote control. In details, refer to the installation manual attached the unit.
6. In case installing the drain pump, remove the short circuit connector of X8A and execute the additional wiring for float switch and drain pump.
7. Symbols show as follows.
   PNK : Pink WHT : White YLW : Yellow ORG : Orange
   BLU : Blue BLK : Black RED : Red
8. Use copper conductors only.

FXAQ20MA / 25MA / 32MAVE / 40MA / 50MA / 63MAVE

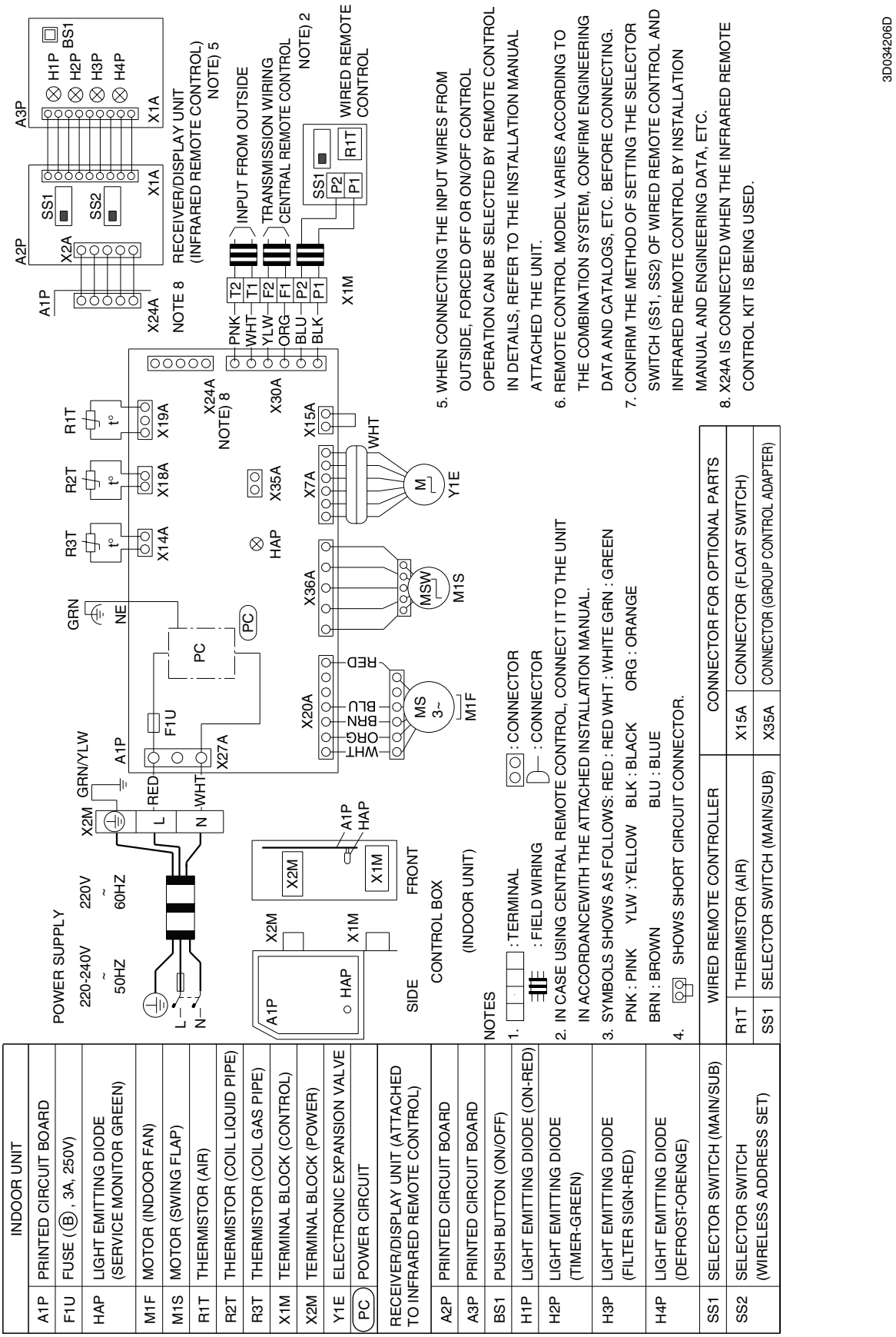

FXLQ20MA / 25MA / 32MA / 40MA / 50MA / 63MAVE
FXNQ20MA / 25MA / 32MA / 40MA / 50MA / 63MAVE

3D039826D

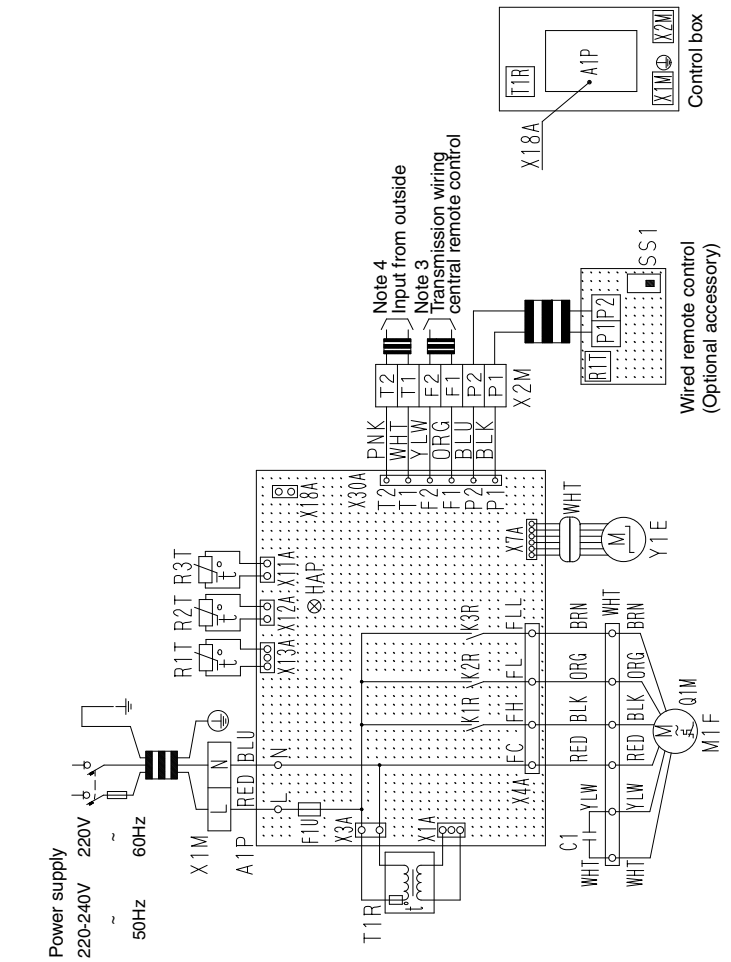

Indoor unit		X2M	Terminal block (Control)
A1P	Printed Circuit board	Y1E	Electronic expansion valve)
C1	Capacitor (M1F)	Wired remote control	
F1U	Fuse (B, 5A, 250V)	R1T	Thermistor (Air)
HAP	Light emitting diode (Service monitor-green)	SS1	Selector switch (Main/sub)
		Connector for optional parts	
K1R-K3R	Magnetic relay (M1F)	X18A	Connector (Wiring adapter for electorical appendices)
M1F	Motor (Indoor fan)		
Q1M	Thermo switch (M1F embedded)		
R1T	Thermistor (Air)		
R2T-R3T	Thermistor (Coil)		
T1R	Transformer (220-240V/22V)		
X1M	Terminal block (Power)		

Notes
1. Terminal block Connector Terminal
2. Field wiring
3. In case using central remote control, connect it to the unit in accordance with the attached instruction manual.
4. When connecting the input wires from outside, forced off or on/off control operation can be selected by remote control.
   In details, refer to the installation manual attached the unit.
5. Symbols show as follows
   PNK : Pink WHT : White YLW : Yellow ORG : Orange
   BLU : Blue BLK : Black RED : Red BRN : Brown
6. Use copper conductors only.

FXUQ71MA / 100MA / 125MAV1

3D044973A

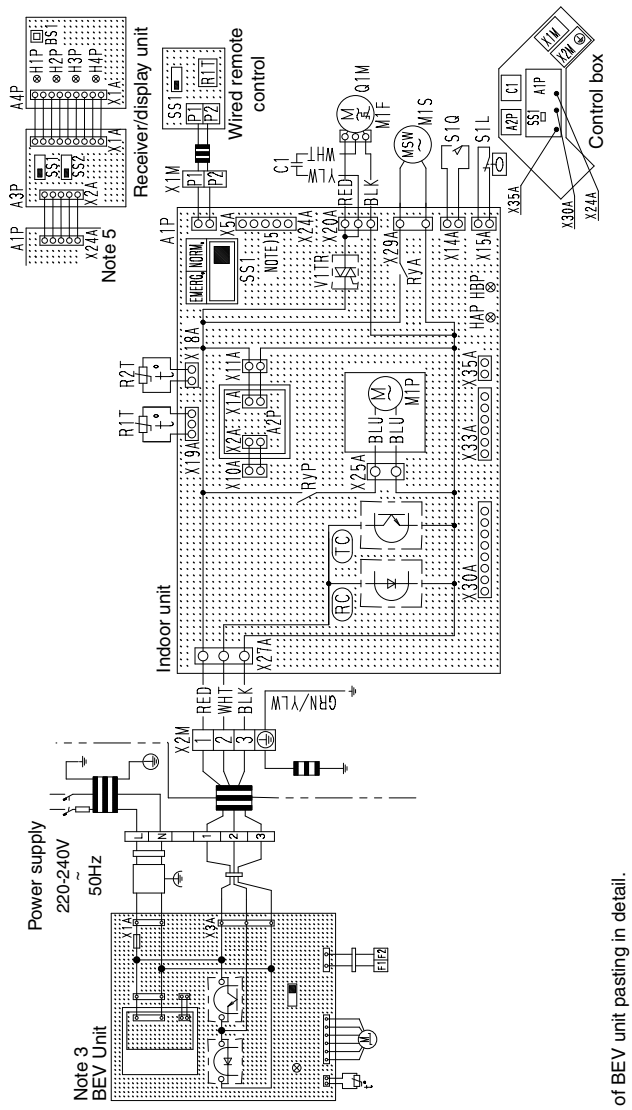

Indoor unit		Wired remote control	
A1P	Printed circuit board	R1T	Thermistor (Air)
A2P	Printed circuit board (Transformer 220~240V/16V)	SS1	Selector switch (Main/Sub)
C1	Capacitor (M1F)		Receiver/display unit (Attached to infrared remote control)
HAP	Light emitting diode (Service monitor green)	A3P	Printed circuit board
HBP	Light emitting diode (service monitor green)	A4P	Printed circuit board
M1S	Motor (Swingflap)	BS1	Push button (ON/OFF)
M1F	Motor (Indoor fan)	H1P	Light emitting diode (On-red)
M1P	Motor (Drain pump)	H2P	Light emitting diode (Timer green)
Q1M	Thermo switch (M1F embedded)	H3P	Light emitting diode (Filter sign-red))
R1T	Thermistor (Air)	H4P	Light emitting diode (Defrost-orange)
R2T	Thermistor (Coil)		
RyA	Magnetic relay (M1A)		
RyP	Magnetic relay (M1P)	SS1	Selector switch (Main/sub)
S1Q	Limit switch (swing flap)	SS2	Selector switch (Wireless address set)
S1L	Float switch		
SS1	Selector switch (Emergency)		Connector for optional parts
V1TR	Phase control circuit	X24A	Connector (Infrared remote control)
X1M	Terminal strip	X30A	Connector (interface adapter for sky air series)
X2M	Terminal strip		
(RC)	Signal receiver	X35A	Connector (group control adapter)
(TC)	Signal transmission circuit		

Notes

1. Terminal block
2. Field wiring
3. The BEV unit shows an outline, please refer to a wiring diagram of BEV unit pasting in detail.
4. In case using central remote control, connect it to the unit in accordance with the attached instruction manual.
5. X24A is connected when the infrared remote control kit is being used.
6. Remote control model varies according to the combination system.
   Confirm engineering materials and catalogs, etc. before connecting.
7. Confirm the method of setting th selector switch (SS1,SS2) of wired remote control and infrared remote control by installation manual and engineering data, etc.
8. Symbols show as follows
   RED : Red BLK : Black WHT : White YLW : Yellow GRN : Green BLU : Blue

Connector

BEVQ71MA / 100MA / 125MAVE

BEV unit	
A1P	Printed circuit board assy
A2P	Power supply printed circuit board assy (220-240V/16V)
F1U	Fuse (B, 10A, 250V)
HAP	Light emitting diode (service monitor-green)
R3T	Thermistor (Gas)
SS1	Selector switch (M/S)
X1M	Terminal strip (Power)
X2M	Terminal strip (Transmission)
Y1E	Electronic expansion valve
Z1C-Z2C Z3C-Z4F	Noise filter

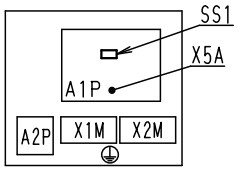

Control box

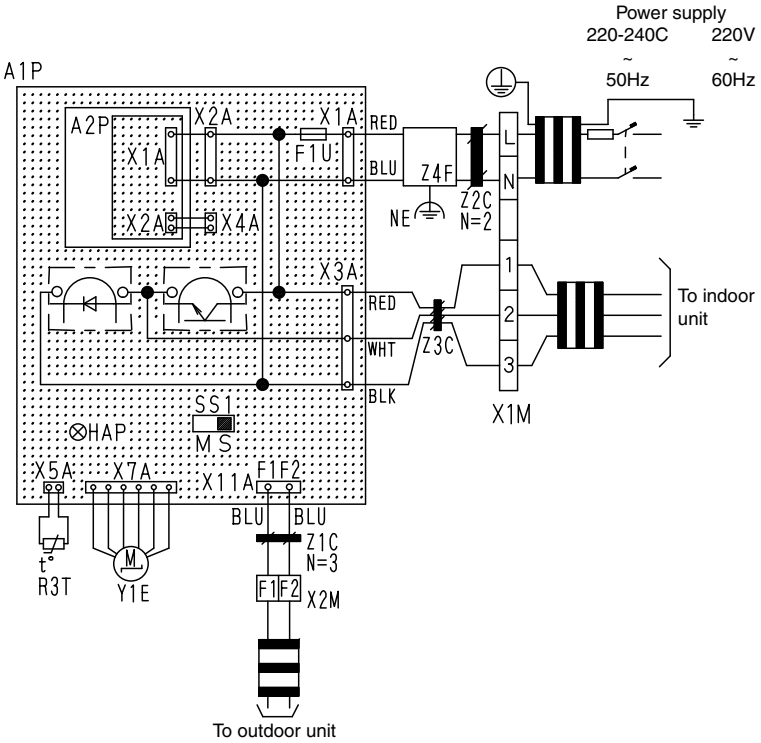

Notes

1. Terminal Connector
2. Field wiring
3. This wiring diagram only shows the BEV unit.
   See the wiring diagrams and installation manuals for the wiring and settings for the indoor, outdoor and BS units.
4. See the indoor unit's wiring diagram when installing optional parts for the indoor unit.
5. Only one indoor unit may be connected to the BEV unit.
   See the indoor unit's wiring diagram for when connecting the remote control.
6. Always use de sky air connection adapter for the indoor unit when using a central control unit.
   Refer to the manual attached the unit when connecting.
7. Cool/heat changeover of indoor units connected to BEV unit cannot be carried out unless they are conenected to BS unit.
   In case of a system with BEV unit only, cool/heat selector is required.
8. Set the SS1 to "M" only for the BEV unit connected to the indoor unit which is to have cool/heat switching capability, when connecting the BS unit.
   The 'M/S" on the SS1 stands for "Main/Sub". This is set to "S" when shipped from the factory.
9. Connect the attached thermistor to the R3T.
10. Symbols show as follows

3D044901B

3. Option List

3.1 Option List of Controllers

Operation Control System Optional Accessories

No.	Item \ Type		FXFQ	FXZQ	FXCQ	FXKQ	FXDQ	FXDQ-M8	FXSQ	FXMQ	FXUQ	FXHQ	FXAQ	FXLQ	FXNQ
1	Wired remote control		BRC1D52												
2	Infrared remote control	cooling only	BRC7F533	BRC7E531	BRC7C67	BRC4C63	BRC4C64			BRC4C66	BRC7C529	BRC7E66	BRC7E619	BRC4C64	
		heat pump	BRC7F532	BRC7E530	BRC7C62	BRC4C61	BRC4C62			BRC4C65	BRC7C528	BRC7E63	BRC7E618	BRC4C62	
3	Simplified remote control		—				BRC2C51				—			BRC2C51	
4	Simplified remote control for hotel use		—				BRC3A61				—			BRC3A61	
5	Centralised remote control		DCS302C51												
6	Unified ON/OFF control		DCS301B51												
7	Schedule timer		DST301B51												
8	Wiring adapter		—	KRP1B57*1	—	KRP1B61	KRP1B61	KRP1B56	—	KRP1C64	KRP4A53	KRP1B3	—	KRP1B61	
9	Wiring adapter (hour meter)		EKRP1C11*1	—	EKRP1B2	—	EKRP1B2*2	—	EKRP1B2	—		—			
10	Wiring adapter for electrical appendices (1)		KRP2A526*1		KRP2A516*1	KRP2A61	KRP2A516	KRP2A53	KRP2A516	KRP2A61		KRP2A62*	KRP2A51		
11	Wiring adapter for electrical appendices (2)		KRP4AA53*1	KRP4A536*1	KRP4A516*1	KRP4A51	KRP4A516	KRP4A54	KRP4A516	KRP4A51		KRP4A52*	KRP4A51		
12	Remote sensor		KRCS01-4	KRCS01-1B											
13	Installation box for adapter PCB		KRP1H98	KRP1BA101	KRP1B96*3/4	—		KRP1BA101		—	KRP1B97	KRP1C93*3	KRP4A93*3/4	—	
14	Electrical box with earth terminal (3 blocks)		—	KJB311A											
15	Electrical box with earth terminal (2 blocks)		KJB212AA	KJB212A											
16	Noise filter (for electromagnetic interface only)		—	KEK26-1A											
17	External control adapter		—	DTA104A52	DTA104A51*1	DTA104A61		DTA104A53	DTA104A51	DTA104A61		DTA104A62	DTA104A51	DTA104A61	
18	Interface adapter for SkyAir series		—								DTA102A52	—			
19	Connector for forced on/forced off		—								EKRORO	—			

Note:

1. Installation box is required
2. Fixingbox is KRP1A90
3. Up to 2 adapters can be fixed per installation box
4. Only 1 installation box can be installed per indoor unit

Various PC Boards

No.	Part name	Model No.	Function
1	Adapter for wiring	KRP1B56 KRP1B57 KRP1B61 KRP1B3 KRP4A53	■ PC board when equipped with auxiliary electric heater in the indoor unit.
2	DIII-NET Expander Adapter	DTA109A51	■ Up to 1,024 units can be centrally controlled in 64 different groups. ■ Wiring restrictions (max. length: 1,000 m, total wiring length: 2,000 m, max. number of branches: 16) apply to each adapter.

System Configuration

No.	Part name		Model No.	Function
1	Residential central remote control		Note2 DCS303A51	• Up to 16 groups of indoor units (128 units) can be easily controlled using the large LCD panel. ON/OFF, temperature setting and scheduling can be controlled individually for indoor units.
2	Central remote control		DCS302C51	• Up to 64 groups of indoor units(128 units) can be connected, and ON/OFF, temperature setting and monitoring can be accomplished individually or simultaneously. Connectable up to 2 controllers in one system.
2-1	Electrical box with earth terminal (3 blocks)		KJB311A	
3	Unified ON/OFF controller		DCS301B51	• Up to 16 groups of indoor units(128 units) can be turned, ON/OFF individually or simultaneously, and operation and malfunction can be displayed. Can be used in combination with up to 8 controllers.
3-1	Electrical box with earth terminal (2 blocks)		KJB212A(A)	
3-2	Noise filter (for electromagnetic interface use only)		KEK26-1A	
4	Schedule timer		DST301B51	• Programmed time weekly schedule can be controlled by unified control for up to 64 groups of indoor units (128 units). Can turn units ON/OFF twice per day.
5	Interface adapter for SkyAir-series	R-407C/R-22	★DTA102A52	• Adapters required to connect products other than those of the VRV System to the high-speed DIII-NET communication system adopted for the VRV System. * To use any of the above optional controllers, an appropriate adapter must be installed on the product unit to be controlled.
		R-410A	★DTA112B51	
6	DIII -NET Expander Adapter		DTA109A51	• Up to 1024 units can be centrally controlled in 64 different groups. • Wiring restrictions (max. lengh : 1,000m, total wiring lengh : 2,000m, max. number of branches : 16) apply to each adapter.
6-1	Mounting plate		KRP4A92	• Fixing plate for DTA109A51

Note:

1. Installation box for ★ adapter must be procured on site.
2. For residential use only. Cannot be used with other centralized control equipment.

Building Management System

No.	Part name					Model No.	Function
1	intelligent Touch Controller	Basic	Hardware	intelligent Touch Controller		DCS601C51	• Air-Conditioning management system that can be controlled by a compact all-in-one unit.
1-1		Option	Hardware	DIII-NET plus adapter		DCS601A52	• Additional 64 groups (10 outdoor units) is possible.
1-2			Software	P. P. D.		DCS002C51	• P. P. D.: Power Proportional Distribution function
1-3				Web		DCS004A51	• Monitors and controls the air conditioning system using the Internet and a Web browser application on a PC.
1-4	Electrical box with earth terminal (4 blocks)					KJB411A	• Wall embedded switch box.
2	intelligent Manager III	Basic	Hardware	Number of units to be connected	128 units	DAM602B52	• Air conditioner management system that can be controlled by personal computers.
					256 units	DAM602B51	
					512 units	DAM602B51x2	
					768 units	DAM602B51x3	
					1024 units	DAM602B51x4	
2-1		Option	Software		P.P.D.	DAM002A51	• Power Proportional Distribution function
2-2					Web	DAM004A51	• Monitors and controls the air conditioning system using the Internet and a Web browser application on a PC.
2-3					Eco	DAM003A51	• ECO (Energy saving functions.)
2-4	Optional DIII Ai unit					DAM101A51	• External temperature sensor for intelligent Manager III.
2-5	Di unit					DEC101A51	• 8 pairs based on a pair of On/Off input and abnormality input.
2-6	Dio unit					DEC102A51	• 4 pairs based on a pair of On/Off input and abnormality input.
3	Communication line	*1 Interface for use in BACnet®				DMS502B51	• Interface unit to allow communications between VRV and BMS. Operation and monitoring of air-conditioning systems through BACnet® communication.
3-1		Optional DIII board				DAM411B51	• Expansion kit, installed on DMS502B51, to provide 2 more DIII-NET communication ports. Not usable independently.
3-2		Optional Di board				DAM412B51	• Expansion kit, installed on DMS502B51, to provide 16 more wattmeter pulse input points. Not usable independently.
4		*2 Interface for use in LONWORKS®				DMS504B51	• Interface unit to allow communications between VRV and BMS. Operation and monitoring of air-conditioning systems through LONWORKS® communication.
5	Contact/analog signal	Parallel interface Basic unit				DPF201A51	• Enables ON/OFF command, operation and display of malfunction; can be used in combination with up to 4 units.
6		Temperature measurement units				DPF201A52	• Enables temperature measurement output for 4 groups; 0-5VDC.
7		Temperature setting units				DPF201A53	• Enables temperature setting input for 16 groups; 0-5VDC.
8		Unification adapter for computerized control				★DCS302A52	• Interface between the central monitoring board and central control units.

Notes:

*1. BACnet® is a registered trademark of American Society of Heating, Refrigerating and Air-Conditioning Engineers (ASHRAE).

*2. LONWORKS®, is a registered trade mark of Echelon Corporation.

*3. Installation box for ★ adapter must be procured on site.

3.2 Option List of Outdoor Unit

RXYSQ4 / 5 / 6P

Optional accessories		RXYSQ4PA7Y1B RXYSQ5PA7Y1B RXYSQ6PA7Y1B	RXYSQ4PA7V1B RXYSQ5PA7V1B RXYSQ6PA7V1B
Cool/Heat Selector		KRC19-26A6	
Fixing box		KJB111A	
Distributive Piping	Refnet header	KHRQ22M29H	
	Refnet joint	KHRQ22M20T	
Central drain plug		KKPJ5F180	

4TW26101

4. Example of connection

Example of connection
(Connection of 8 indoor units Heat pump system)

1 indoor unit
refnet joint
refnet header

			Branch with refnet joint	Branch with refnet joint and refnet header	Branch with refnet header
			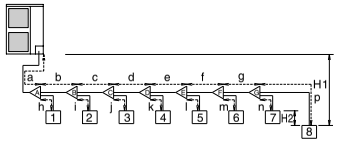	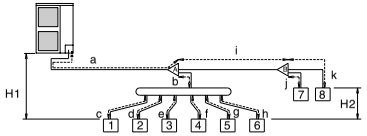	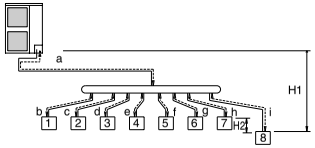
Maximum allowable length	Between outdoor and indoor units	Actual pipe length	Pipe length between outdoor and indoor units ≤150 m		
			[Example] unit 8: a+b+c+d+e+f+g+p≤150 m	[Example] unit 6: a+b+h?150 m, unit 8: a+i+k≤150 m	[Example] unit 8: a+i≤150 m
		Equivalent length	Equivalent pipe length between outdoor and indoor units ≤175 m (Assume equivalent pipe length of refnet joint to be 0.5 m and of the refnet header to be 1.0 m. (for calculation purposes))		
		Total extension length	Total piping length from outdoor unit to all indoor units between 10 m and 300 m		
Allowable height	Between outdoor and indoor units	Difference in height	Difference in height between outdoor and indoor units (H1)≤50 m (≤40 m if outdoor unit is located in a lower position).		
	Between indoor and indoor units	Difference in height	Difference in height between adjacent indoor units (H2)≤15 m		
Allowable length after the branch		Actual pipe length	Pipe length from rst refrigerant branch kit (either refnet joint or refnet header) to indoor unit ≤40 m		
			[Example] unit 8: b+c+d+e+f+g+p≤40 m	[Example] unit 6: b+h≤40 m, unit 8: i+k≤40 m	[Example] unit 8: i≤40 m

Refrigerant branch kit selection

Refrigerant branch kits can only be used with R-410A.

Use the following refnet joint

Outdoor unit capacity type	Refrigerant branch kit name
RXYSQ4~6	KHRQ22M20T

Use the following refnet header

Outdoor unit capacity type	Refrigerant branch kit name
RXYSQ4~6	KHRQ22M29H

Pipe size selection
Caution on selecting connection pipes
If the overall equivalent piping length is ≤90 m, be sure to enlarge the pipe diameter of the gas-side main piping. If the recommended pipe size is not available, stick to the original pipe diameter (which may result in a small capacity decrease).
[Gas side]
RXYSQ4+5: Ø15.9→Ø19.1
RXYSQ6: Ø19.1→Ø22.2

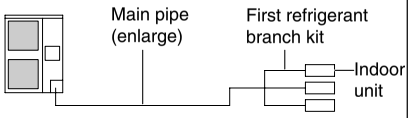

A. Piping between outdoor unit and refrigerant branch kit
- Match to the size of the connection piping on the outdoor unit.

Outdoor unit connection piping size

Outdoor unit capacity type	Piping size (outer diameter x minimum thickness)	
	Gas pipe	Liquid pipe
RXYSQ4+5	Ø15.9x1.0 (Ø19.1x1.0)	Ø9.5x0.8
RXYSQ6	Ø19.1x1.0 (Ø22.2x1.0)	

B. Piping between refrigerant branch kits
- Use the pipe size from the following table.

Piping size (outer diameter x minimum thickness)	
Gas pipe	Liquid pipe
Ø15.9x1.0	Ø9.5x0.8

C. Piping between refrigerant branch kit and indoor unit
- Pipe size for direct connection to indoor unit must be the same as the connection size of indoor unit.

Indoor capacity index	Piping size (outer diameter x minimum thickness)	
	Gas pipe	Liquid pipe
20+25+32+40+50	Ø12.7x0.8	Ø6.4x0.8
63+80+100+125	Ø15.9x1.0	Ø9.5x0.8

How to calculate the additional refrigerant to be charged
Additional refrigerant to be charged R (kg)
R should be rounded off in units of 0.1 kg

R= (Total length (m) of liquid piping size at Ø9.5) x0.054+ (Total length (m) of liquid piping size at Ø6.4) x0.022

Example for refrigerant branch using refnet joint and refnet header

a: Ø9.5x30 m	d: Ø9.5x13 m	g: Ø6.4x10 m	j: Ø6.4x10 m
b: Ø9.5x10 m	e: Ø6.4x10 m	h: Ø6.4x20 m	k: Ø6.4x9 m
c: Ø9.5x10 m	f: Ø6.4x10 m	i: Ø9.5x10 m	

R=[73 x 0.054] + [69 x 0.022] = 5.46 5.5 kg

5. Thermistor Resistance / Temperature Characteristics

Indoor unit	For air suction	R1T
	For liquid pipe	R2T
	For gas pipe	R3T
Outdoor unit	For outdoor air	R1T
	For suction pipe 1	R3T
	For heat exchanger	R4T, R6T
	For suction pipe 2	R5T
	For Subcooling heat exchanger outlet	R6T, R4T
	For Liquid pipe	R7T, R8T

Outdoor unit for fin thermistor R1T

(kΩ)

T°C	0.0
-10	-
-8	-
-6	88.0
-4	79.1
-2	71.1
0	64.1
2	57.8
4	52.3
6	47.3
8	42.9
10	38.9
12	35.3
14	32.1
16	29.2
18	26.6
20	24.3
22	22.2
24	20.3
26	18.5
28	17.0
30	15.6
32	14.2
34	13.1
36	12.0
38	11.1
40	10.3
42	9.5
44	8.8
46	8.2
48	7.6
50	7.0
52	6.7
54	6.0
56	5.5
58	5.2
60	4.79
62	4.46
64	4.15
66	3.87
68	3.61
70	3.37
72	3.15
74	2.94
76	2.75
78	2.51
80	2.41
82	2.26
84	2.12
86	1.99
88	1.87
90	1.76
92	1.65
94	1.55
96	1.46
98	1.38

T°C	0.0	0.5
-20	197.81	192.08
-19	186.53	181.16
-18	175.97	170.94
-17	166.07	161.36
-16	156.80	152.38
-15	148.10	143.96
-14	139.94	136.05
-13	132.28	128.63
-12	125.09	121.66
-11	118.34	115.12
-10	111.99	108.96
-9	106.03	103.18
-8	100.41	97.73
-7	95.14	92.61
-6	90.17	87.79
-5	85.49	83.25
-4	81.08	78.97
-3	76.93	74.94
-2	73.01	71.14
-1	69.32	67.56
0	65.84	64.17
1	62.54	60.96
2	59.43	57.94
3	56.49	55.08
4	53.71	52.38
5	51.09	49.83
6	48.61	47.42
7	46.26	45.14
8	44.05	42.98
9	41.95	40.94
10	39.96	39.01
11	38.08	37.18
12	36.30	35.45
13	34.62	33.81
14	33.02	32.25
15	31.50	30.77
16	30.06	29.37
17	28.70	28.05
18	27.41	26.78
19	26.18	25.59
20	25.01	24.45
21	23.91	23.37
22	22.85	22.35
23	21.85	21.37
24	20.90	20.45
25	20.00	19.56
26	19.14	18.73
27	18.32	17.93
28	17.54	17.17
29	16.80	16.45
30	16.10	15.76

T°C	0.0	0.5
30	16.10	15.76
31	15.43	15.10
32	14.79	14.48
33	14.18	13.88
34	13.59	13.31
35	13.04	12.77
36	12.51	12.25
37	12.01	11.76
38	11.52	11.29
39	11.06	10.84
40	10.63	10.41
41	10.21	10.00
42	9.81	9.61
43	9.42	9.24
44	9.06	8.88
45	8.71	8.54
46	8.37	8.21
47	8.05	7.90
48	7.75	7.60
49	7.46	7.31
50	7.18	7.04
51	6.91	6.78
52	6.65	6.53
53	6.41	6.53
54	6.65	6.53
55	6.41	6.53
56	6.18	6.06
57	5.95	5.84
58	5.74	5.43
59	5.14	5.05
60	4.96	4.87
61	4.79	4.70
62	4.62	4.54
63	4.46	4.38
64	4.30	4.23
65	4.16	4.08
66	4.01	3.94
67	3.88	3.81
68	3.75	3.68
69	3.62	3.56
70	3.50	3.44
71	3.38	3.32
72	3.27	3.21
73	3.16	3.11
74	3.06	3.01
75	2.96	2.91
76	2.86	2.82
77	2.77	2.72
78	2.68	2.64
79	2.60	2.55
80	2.51	2.47

Outdoor Unit Thermistors for Discharge Pipe (R2T)

(kΩ)

T°C	0.0	0.5	T°C	0.0	0.5	T°C	0.0	0.5
0	640.44	624.65	50	72.32	70.96	100	13.35	13.15
1	609.31	594.43	51	69.64	68.34	101	12.95	12.76
2	579.96	565.78	52	67.06	65.82	102	12.57	12.38
3	552.00	538.63	53	64.60	63.41	103	12.20	12.01
4	525.63	512.97	54	62.24	61.09	104	11.84	11.66
5	500.66	488.67	55	59.97	58.87	105	11.49	11.32
6	477.01	465.65	56	57.80	56.75	106	11.15	10.99
7	454.60	443.84	57	55.72	54.70	107	10.83	10.67
8	433.37	423.17	58	53.72	52.84	108	10.52	10.36
9	413.24	403.57	59	51.98	50.96	109	10.21	10.06
10	394.16	384.98	60	49.96	49.06	110	9.92	9.78
11	376.05	367.35	61	48.19	47.33	111	9.64	9.50
12	358.88	350.62	62	46.49	45.67	112	9.36	9.23
13	342.58	334.74	63	44.86	44.07	113	9.10	8.97
14	327.10	319.66	64	43.30	42.54	114	8.84	8.71
15	312.41	305.33	65	41.79	41.06	115	8.59	8.47
16	298.45	291.73	66	40.35	39.65	116	8.35	8.23
17	285.18	278.80	67	38.96	38.29	117	8.12	8.01
18	272.58	266.51	68	37.63	36.98	118	7.89	7.78
19	260.60	254.72	69	36.34	35.72	119	7.68	7.57
20	249.00	243.61	70	35.11	34.51	120	7.47	7.36
21	238.36	233.14	71	33.92	33.35	121	7.26	7.16
22	228.05	223.08	72	32.78	32.23	122	7.06	6.97
23	218.24	213.51	73	31.69	31.15	123	6.87	6.78
24	208.90	204.39	74	30.63	30.12	124	6.69	6.59
25	200.00	195.71	75	29.61	29.12	125	6.51	6.42
26	191.53	187.44	76	28.64	28.16	126	6.33	6.25
27	183.46	179.57	77	27.69	27.24	127	6.16	6.08
28	175.77	172.06	78	26.79	26.35	128	6.00	5.92
29	168.44	164.90	79	25.91	25.49	129	5.84	5.76
30	161.45	158.08	80	25.07	24.66	130	5.69	5.61
31	154.79	151.57	81	24.26	23.87	131	5.54	5.46
32	148.43	145.37	82	23.48	23.10	132	5.39	5.32
33	142.37	139.44	83	22.73	22.36	133	5.25	5.18
34	136.59	133.79	84	22.01	21.65	134	5.12	5.05
35	131.06	128.39	85	21.31	20.97	135	4.98	4.92
36	125.79	123.24	86	20.63	20.31	136	4.86	4.79
37	120.76	118.32	87	19.98	19.67	137	4.73	4.67
38	115.95	113.62	88	19.36	19.05	138	4.61	4.55
39	111.35	109.13	89	18.75	18.46	139	4.49	4.44
40	106.96	104.84	90	18.17	17.89	140	4.38	4.32
41	102.76	100.73	91	17.61	17.34	141	4.27	4.22
42	98.75	96.81	92	17.07	16.80	142	4.16	4.11
43	94.92	93.06	93	16.54	16.29	143	4.06	4.01
44	91.25	89.47	94	16.04	15.79	144	3.96	3.91
45	87.74	86.04	95	15.55	15.31	145	3.86	3.81
46	84.38	82.75	96	15.08	14.85	146	3.76	3.72
47	81.16	79.61	97	14.62	14.40	147	3.67	3.62
48	78.09	76.60	98	14.18	13.97	148	3.58	3.54
49	75.14	73.71	99	13.76	13.55	149	3.49	3.45
50	72.32	70.96	100	13.35	13.15	150	3.41	3.37

6. Pressure Sensor

$P_H = 1.38V-0.69$
$P_L = 0.57V-0.28$
P_H : High pressure (MPa)
V_L : Low pressure (MPa)
V : Voltage (V)

P_H : Detected Pressure [High Side] MPa
P_L : Detected Pressure [Low Side] MPa
V_H : Output Voltage [High Side] V_{DC}
V_L : Output Voltage [Low Side] V_{DC}

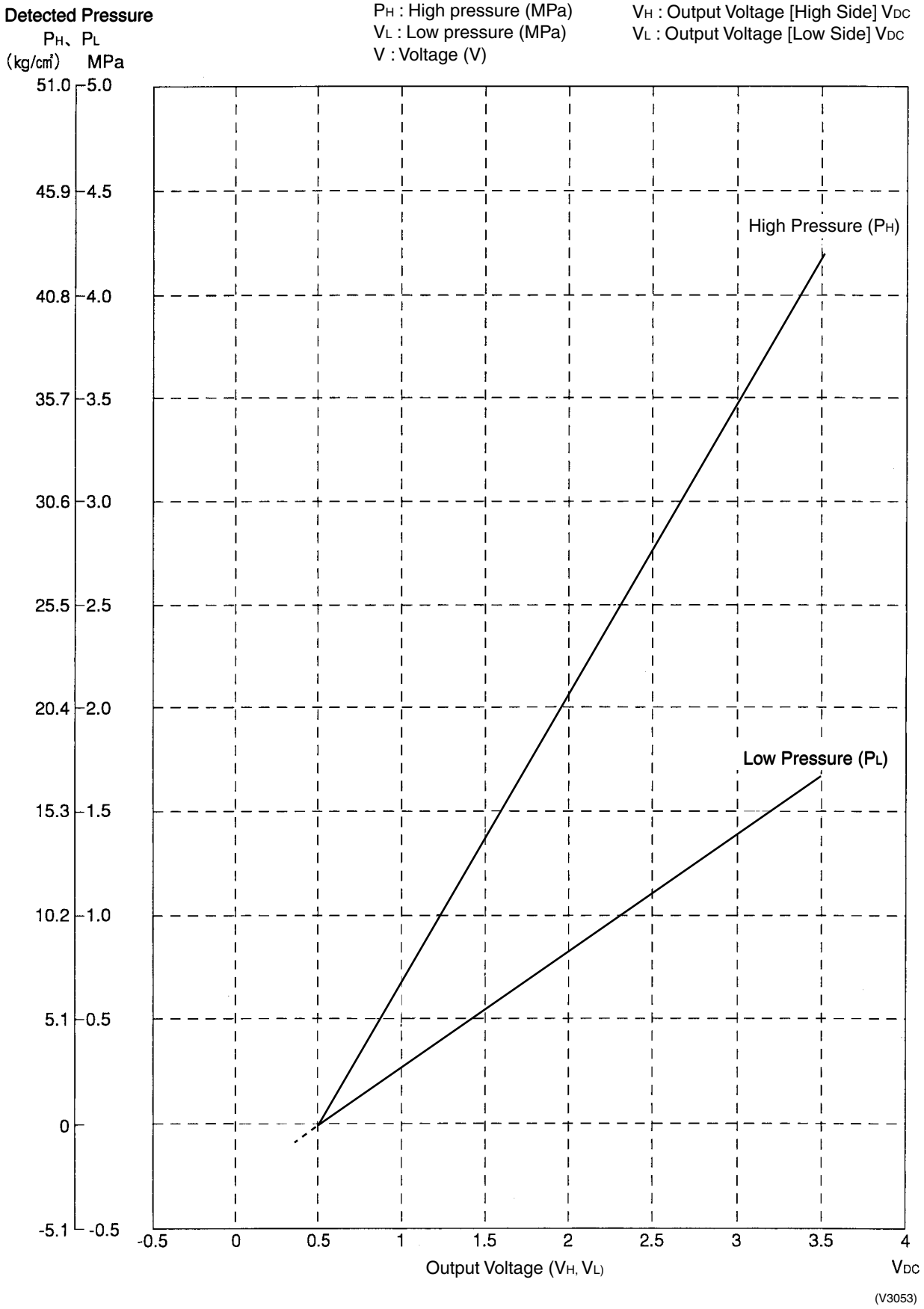

7. Method of Replacing the Inverter's Power Transistors Modules

Checking failures in power semiconductors mounted on inverter PC board

Check the power semiconductors mounted on the inverter PC board by the use of a multiple tester.

<Items to be prepared>

- Multiple tester : Prepare the digital type of multiple tester with diode check function.

<Preparation>

- Turn OFF the power supply. Then, after a lapse of 10 minutes or more, make measurement of resistance.
- To make measurement, disconnect all connectors and terminals.

Inverter PC board (RXYSQ4 / 5 / 6PA7Y1B)

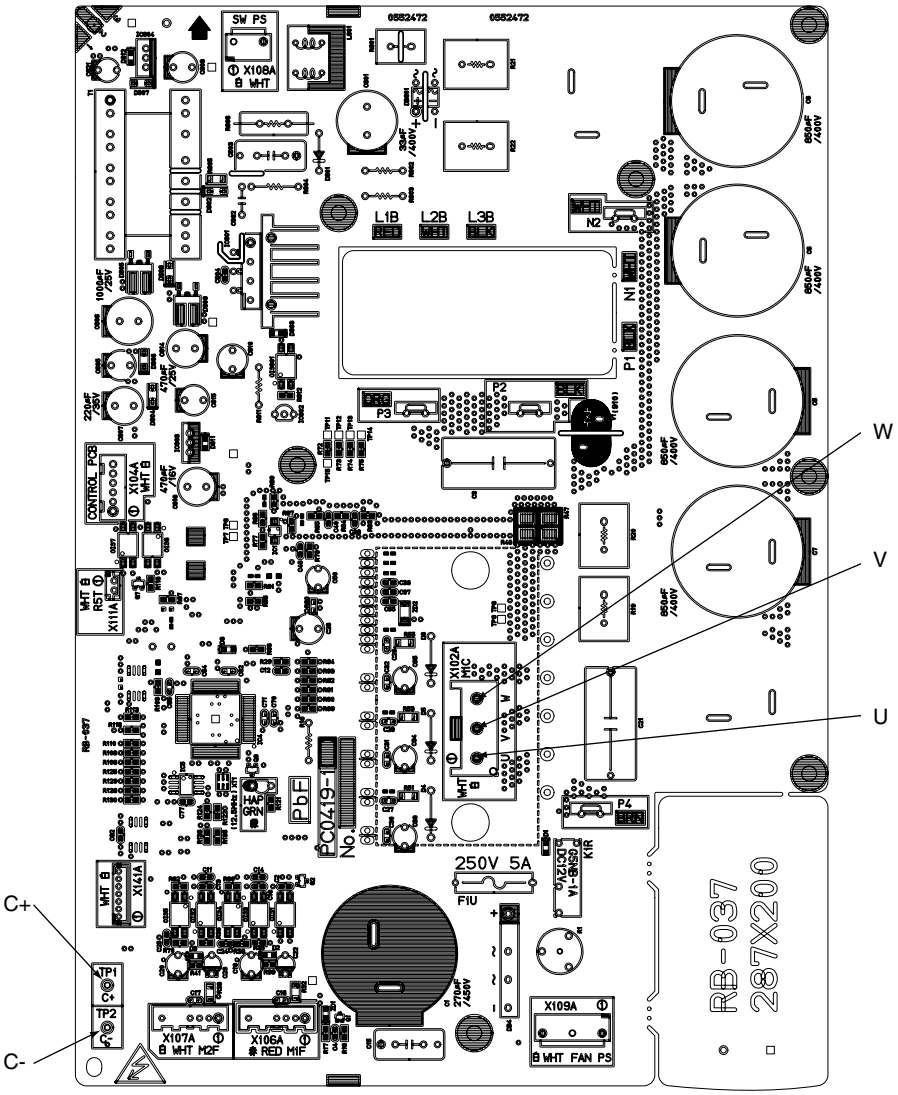

Inverter PC board (RXYSQ4 / 5 / 6PA7V1B)

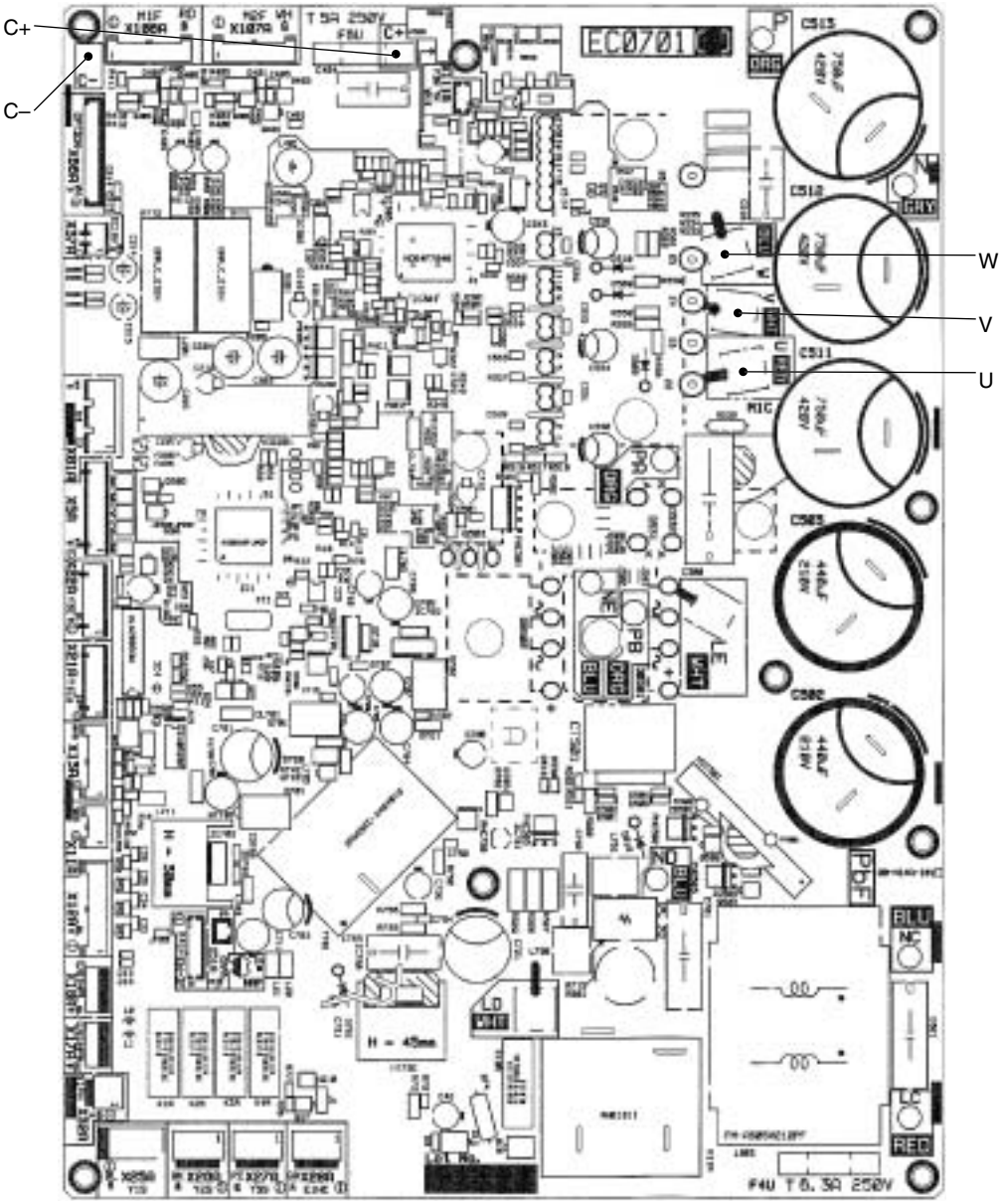

Power module checking

When using the digital type of multiple tester, make measurement in diode check mode.

Tester terminal		Criterion	Remark
+	-		
C+	U	Not less than 0.3V (including ∞)*	It may take time to determine the voltage due to capacitor charge or else.
	V		
	W		
U	C-	Not less than 0.3V (including ∞)*	
V			
W			
U	C+	0.3 to 0.7V (including ∞)*	
V			
W			
C-	U	0.3 to 0.7V (including ∞)*	
	V		
	W		

*There needs to be none of each value variation.

The following abnormalities are also doubted besides the PC board abnormality.

- Faulty compressor (ground fault, ground leakage)
- Faulty fan motor (ground leakage)

Part 9
Precautions for New Refrigerant (R-410A)

1. Precautions for New Refrigerant (R-410A) 258
1.1 Outline 258
1.2 Refrigerant Cylinders.....260
1.3 Service Tools.....261

1. Precautions for New Refrigerant (R-410A)

1.1 Outline

1.1.1 About Refrigerant R-410A

■ Characteristics of new refrigerant, R-410A

1. Performance
   Almost the same performance as R-22 and R-407C
2. Pressure
   Working pressure is approx. 1.4 times more than R-22 and R-407C.
3. Refrigerant composition
   Few problems in composition control, since it is a Quasi-azeotropic mixture refrigerant.

	HFC units (Units using new refrigerants)		HCFC units
Refrigerant name	R-407C	R-410A	R-22
Composing substances	Non-azeotropic mixture of HFC32, HFC125 and HFC134a (*1)	Quasi-azeotropic mixture of HFC32 and JFC125 (*1)	Single-component refrigerant
Design pressure	3.2 MPa (gauge pressure) = 32.6 kgf/cm^2	4.0 MPa (gauge pressure) = 40.8 kgf/cm^2	2.75MPa (gauge pressure) = 28.0 kgf/cm^2
Refrigerant oil	Synthetic oil (Ether)		Mineral oil (Suniso)
Ozone destruction factor (ODP)	0	0	0.05
Combustibility	None	None	None
Toxicity	None	None	None

★1. Non-azeotropic mixture refrigerant: mixture of two or more refrigerants having different boiling points.

★2. Quasi-azeotropic mixture refrigerant: mixture of two or more refrigerants having similar boiling points.

★3. The design pressure is different at each product. Please refer to the installation manual for each product.

(Reference) 1 MPa ≒ 10.19716 kgf / cm^2

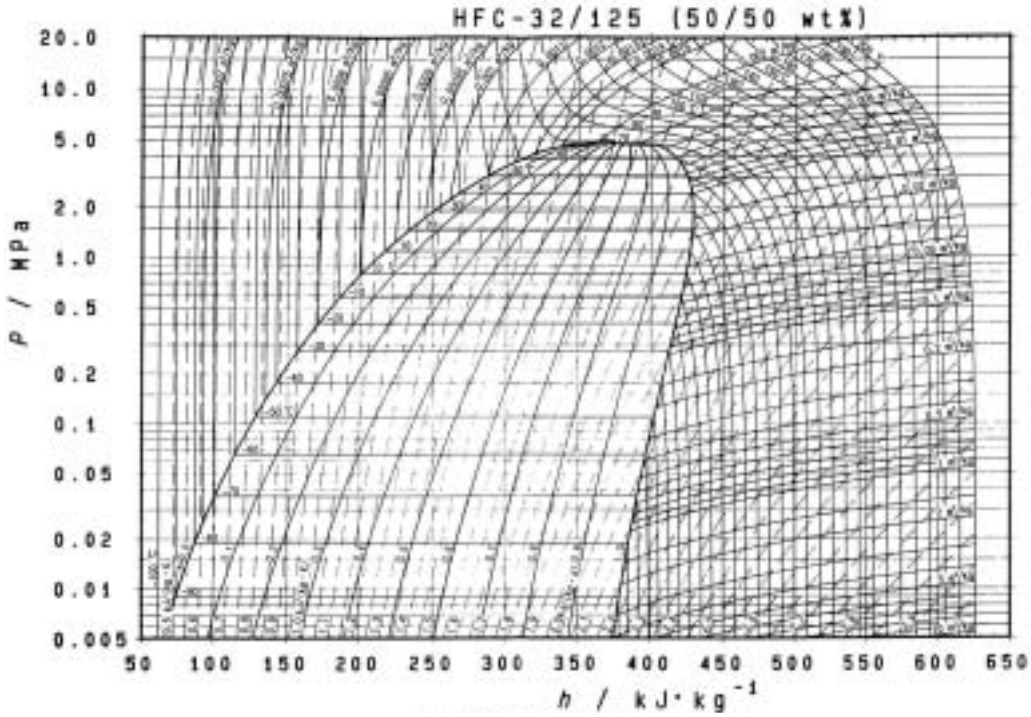

Pressure-Enthalpy curves of HFC-32/125 (50/50wt%)

■ Thermodynamic characteristic of R-410A

DAIREP ver2.0

Temperature (°C)	Steam pressure (kPa)		Density (kg/m³)		Specific heat at constant pressure (kJ/kgK)		Specific enthalpy (kJ/kg)		Specific entropy (kJ/KgK)	
	Liquid	Vapor	Liquid	Vapor	Liquid	Vapor	Liquid	Vapor	Liquid	Vapor
-70	36.13	36.11	1410.7	1.582	1.372	0.695	100.8	390.6	0.649	2.074
-68	40.83	40.80	1404.7	1.774	1.374	0.700	103.6	391.8	0.663	2.066
-66	46.02	45.98	1398.6	1.984	1.375	0.705	106.3	393.0	0.676	2.058
-64	51.73	51.68	1392.5	2.213	1.377	0.710	109.1	394.1	0.689	2.051
-62	58.00	57.94	1386.4	2.463	1.378	0.715	111.9	395.3	0.702	2.044
-60	64.87	64.80	1380.2	2.734	1.379	0.720	114.6	396.4	0.715	2.037
-58	72.38	72.29	1374.0	3.030	1.380	0.726	117.4	397.6	0.728	2.030
-56	80.57	80.46	1367.8	3.350	1.382	0.732	120.1	398.7	0.741	2.023
-54	89.49	89.36	1361.6	3.696	1.384	0.737	122.9	399.8	0.754	2.017
-52	99.18	99.03	1355.3	4.071	1.386	0.744	125.7	400.9	0.766	2.010
-51.58	101.32	101.17	1354.0	4.153	1.386	0.745	126.3	401.1	0.769	2.009
-50	109.69	109.51	1349.0	4.474	1.388	0.750	128.5	402.0	0.779	2.004
-48	121.07	120.85	1342.7	4.909	1.391	0.756	131.2	403.1	0.791	1.998
-46	133.36	133.11	1336.3	5.377	1.394	0.763	134.0	404.1	0.803	1.992
-44	146.61	146.32	1330.0	5.880	1.397	0.770	136.8	405.2	0.816	1.987
-42	160.89	160.55	1323.5	6.419	1.401	0.777	139.6	406.2	0.828	1.981
-40	176.24	175.85	1317.0	6.996	1.405	0.785	142.4	407.3	0.840	1.976
-38	192.71	192.27	1310.5	7.614	1.409	0.792	145.3	408.3	0.852	1.970
-36	210.37	209.86	1304.0	8.275	1.414	0.800	148.1	409.3	0.864	1.965
-34	229.26	228.69	1297.3	8.980	1.419	0.809	150.9	410.2	0.875	1.960
-32	249.46	248.81	1290.6	9.732	1.424	0.817	153.8	411.2	0.887	1.955
-30	271.01	270.28	1283.9	10.53	1.430	0.826	156.6	412.1	0.899	1.950
-28	293.99	293.16	1277.1	11.39	1.436	0.835	159.5	413.1	0.911	1.946
-26	318.44	317.52	1270.2	12.29	1.442	0.844	162.4	414.0	0.922	1.941
-24	344.44	343.41	1263.3	13.26	1.448	0.854	165.3	414.9	0.934	1.936
-22	372.05	370.90	1256.3	14.28	1.455	0.864	168.2	415.7	0.945	1.932
-20	401.34	400.06	1249.2	15.37	1.461	0.875	171.1	416.6	0.957	1.927
-18	432.36	430.95	1242.0	16.52	1.468	0.886	174.1	417.4	0.968	1.923
-16	465.20	463.64	1234.8	17.74	1.476	0.897	177.0	418.2	0.980	1.919
-14	499.91	498.20	1227.5	19.04	1.483	0.909	180.0	419.0	0.991	1.914
-12	536.58	534.69	1220.0	20.41	1.491	0.921	182.9	419.8	1.003	1.910
-10	575.26	573.20	1212.5	21.86	1.499	0.933	185.9	420.5	1.014	1.906
-8	616.03	613.78	1204.9	23.39	1.507	0.947	189.0	421.2	1.025	1.902
-6	658.97	656.52	1197.2	25.01	1.516	0.960	192.0	421.9	1.036	1.898
-4	704.15	701.49	1189.4	26.72	1.524	0.975	195.0	422.6	1.048	1.894
-2	751.64	748.76	1181.4	28.53	1.533	0.990	198.1	423.2	1.059	1.890
0	801.52	798.41	1173.4	30.44	1.543	1.005	201.2	423.8	1.070	1.886
2	853.87	850.52	1165.3	32.46	1.552	1.022	204.3	424.4	1.081	1.882
4	908.77	905.16	1157.0	34.59	1.563	1.039	207.4	424.9	1.092	1.878
6	966.29	962.42	1148.6	36.83	1.573	1.057	210.5	425.5	1.103	1.874
8	1026.5	1022.4	1140.0	39.21	1.584	1.076	213.7	425.9	1.114	1.870
10	1089.5	1085.1	1131.3	41.71	1.596	1.096	216.8	426.4	1.125	1.866
12	1155.4	1150.7	1122.5	44.35	1.608	1.117	220.0	426.8	1.136	1.862
14	1224.3	1219.2	1113.5	47.14	1.621	1.139	223.2	427.2	1.147	1.859
16	1296.2	1290.8	1104.4	50.09	1.635	1.163	226.5	427.5	1.158	1.855
18	1371.2	1365.5	1095.1	53.20	1.650	1.188	229.7	427.8	1.169	1.851
20	1449.4	1443.4	1085.6	56.48	1.666	1.215	233.0	428.1	1.180	1.847
22	1530.9	1524.6	1075.9	59.96	1.683	1.243	236.4	428.3	1.191	1.843
24	1615.8	1609.2	1066.0	63.63	1.701	1.273	239.7	428.4	1.202	1.839
26	1704.2	1697.2	1055.9	67.51	1.721	1.305	243.1	428.6	1.214	1.834
28	1796.2	1788.9	1045.5	71.62	1.743	1.341	246.5	428.6	1.225	1.830
30	1891.9	1884.2	1034.9	75.97	1.767	1.379	249.9	428.6	1.236	1.826
32	1991.3	1983.2	1024.1	80.58	1.793	1.420	253.4	428.6	1.247	1.822
34	2094.5	2086.2	1012.9	85.48	1.822	1.465	256.9	428.4	1.258	1.817
36	2201.7	2193.1	1001.4	90.68	1.855	1.514	260.5	428.3	1.269	1.813
38	2313.0	2304.0	989.5	96.22	1.891	1.569	264.1	428.0	1.281	1.808
40	2428.4	2419.2	977.3	102.1	1.932	1.629	267.8	427.7	1.292	1.803
42	2548.1	2538.6	964.6	108.4	1.979	1.696	271.5	427.2	1.303	1.798
44	2672.2	2662.4	951.4	115.2	2.033	1.771	275.3	426.7	1.315	1.793
46	2800.7	2790.7	937.7	122.4	2.095	1.857	279.2	426.1	1.327	1.788
48	2933.7	2923.6	923.3	130.2	2.168	1.955	283.2	425.4	1.339	1.782
50	3071.5	3061.2	908.2	138.6	2.256	2.069	287.3	424.5	1.351	1.776
52	3214.0	3203.6	892.2	147.7	2.362	2.203	291.5	423.5	1.363	1.770
54	3361.4	3351.0	875.1	157.6	2.493	2.363	295.8	422.4	1.376	1.764
56	3513.8	3503.5	856.8	168.4	2.661	2.557	300.3	421.0	1.389	1.757
58	3671.3	3661.2	836.9	180.4	2.883	2.799	305.0	419.4	1.403	1.749
60	3834.1	3824.2	814.9	193.7	3.191	3.106	310.0	417.6	1.417	1.741
62	4002.1	3992.7	790.1	208.6	3.650	3.511	315.3	415.5	1.433	1.732
64	4175.7	4166.8	761.0	225.6	4.415	4.064	321.2	413.0	1.450	1.722

1.2 Refrigerant Cylinders

■ Cylinder specifications

- The cylinder is painted refrigerant color (pink).
- The cylinder valve is equipped with a siphon tube.

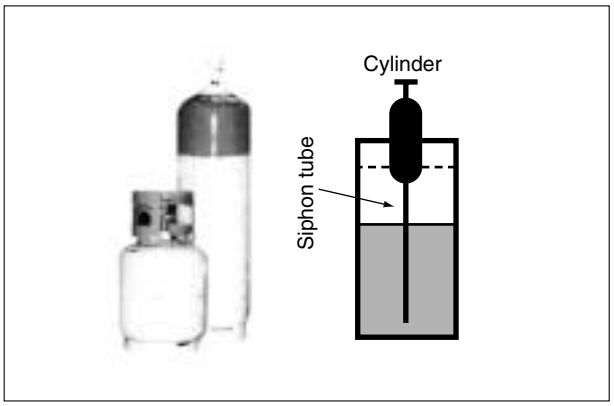

Refrigerant can be charged in liquid state with cylinder in upright position.

Caution: Do not lay cylinder on its side during charging, since it cause refrigerant in gas state to enter the system.

■ Handling of cylinders

(1) Laws and regulations

R-410A is liquefied gas, and the High-Pressure Gas Safety Law must be observed in handling them. Before using, refer to the High-Pressure Gas Safety Law.
The Law stipulates standards and regulations that must be followed to prevent accidents with high-pressure gases. Be sure to follow the regulations.

(2) Handing of vessels

Since R-410A is high-pressure gas, it is contained in high-pressure vessels.
Although those vessels are durable and strong, careless handling can cause damage that can lead to unexpected accidents. Do not drop vessels, let them fall, apply impact or roll them on the ground.

(3) Storage

Although R-410A is not flammable, it must be stored in a well-ventilated, cool, and dark place in the same way as any other high-pressure gases.
It should also be noted that high-pressure vessels are equipped with safety devices that releases gas when the ambient temperature reaches more than a certain level (fusible plug melts) and when the pressure exceeds a certain level (spring-type safety valve operates).

1.3 Service Tools

R-410A is used under higher working pressure, compared to previous refrigerants (R-22,R-407C). Furthermore, the refrigerating machine oil has been changed from Suniso oil to Ether oil, and if oil mixing is occurred, sludge results in the refrigerants and causes other problems. Therefore, gauge manifolds and charge hoses that are used with a previous refrigerant (R-22,R-407C) can not be used for products that use new refrigerants.
Be sure to use dedicated tools and devices.

■ Tool compatibility

Tool	Compatibility			Reasons for change
	HFC		HCFC	
	R-410A	R-407C	R-22	
Gauge manifold Charge hose	×			• Do not use the same tools for R-22 and R-410A. • Thread specification differs for R-410A and R-407C.
Charging cylinder	×		○	• Weighting instrument used for HFCs.
Gas detector	○		×	• The same tool can be used for HFCs.
Vacuum pump (pump with reverse flow preventive function)	○			• To use existing pump for HFCs, vacuum pump adapter must be installed.
Weighting instrument	○			
Charge mouthpiece	×			• Seal material is different between R-22 and HFCs. • Thread specification is different between R-410A and others.
Flaring tool (Clutch type)	○			• For R-410A, flare gauge is necessary.
Torque wrench	○			• Torque-up for 1/2 and 5/8
Pipe cutter	○			
Pipe expander	○			
Pipe bender	○			
Pipe assembling oil	×			• Due to refrigerating machine oil change. (No Suniso oil can be used.)
Refrigerant recovery device	Check your recovery device.			
Refrigerant piping	See the chart below.			• Only ϕ19.1 is changed to 1/2H material while the previous material is "O".

As for the charge mouthpiece and packing, 1/2UNF20 is necessary for mouthpiece size of charge hose.

■ Copper tube material and thickness

Pipe size	R-407C		R-410A	
	Material	Thickness t (mm)	Material	Thickness t (mm)
ϕ6.4	O	0.8	O	0.8
ϕ9.5	O	0.8	O	0.8
ϕ12.7	O	0.8	O	0.8
ϕ15.9	O	1.0	O	1.0
ϕ19.1	O	1.0	1/2H	1.0
ϕ22.2	1/2H	1.0	1/2H	1.0
ϕ25.4	1/2H	1.0	1/2H	1.0
ϕ28.6	1/2H	1.0	1/2H	1.0
ϕ31.8	1/2H	1.2	1/2H	1.1
ϕ38.1	1/2H	1.4	1/2H	1.4
ϕ44.5	1/2H	1.6	1/2H	1.6

* O: Soft (Annealed)
H: Hard (Drawn)

1. Flaring tool

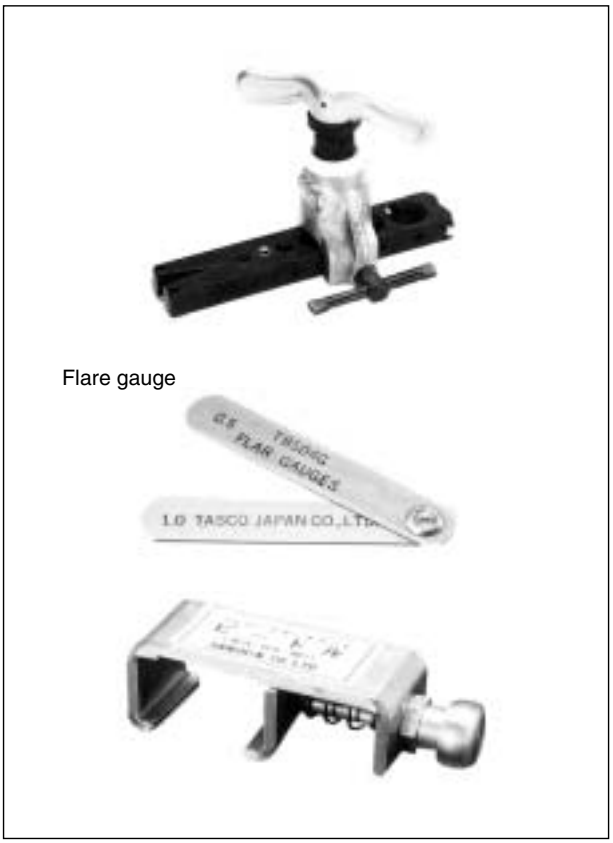

■ Specifications

• Dimension A

Unit:mm

Nominal size	Tube O.D.	$A^{+0}_{-0.4}$	
	Do	Class-2 (R-410A)	Class-1 (Conventional)
1/4	6.35	9.1	9.0
3/8	9.52	13.2	13.0
1/2	12.70	16.6	16.2
5/8	15.88	19.7	19.4
3/4	19.05	24.0	23.3

■ Differences

• Change of dimension A

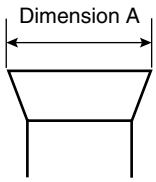

For class-1: R-407C
For class-2: R-410A

Conventional flaring tools can be used when the work process is changed.
(change of work process)
Previously, a pipe extension margin of 0 to 0.5mm was provided for flaring. For R-410A air conditioners, perform pipe flaring with a pipe extension margin of 1.0 to 1.5mm.
(For clutch type only)
Conventional tool with pipe extension margin adjustment can be used.

2. Torque wrench

■ Specifications

• Dimension B Unit:mm

Nominal size	Class-1	Class-2	Previous
1/2	24	26	24
5/8	27	29	27

No change in tightening torque
No change in pipes of other sizes

■ Differences

• Change of dimension B
Only 1/2", 5/8" are extended

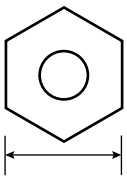

For class-1: R-407C
For class-2: R-410A

3. Vacuum pump with check valve

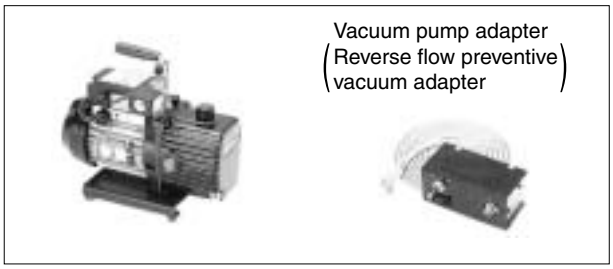

■ Specifications

• Discharge speed
50 l/min (50Hz)
60 l/min (60Hz)

• Suction port UNF7/16-20(1/4 Flare)
UNF1/2-20(5/16 Flare) with adapter

● Maximum degree of vacuum
Select a vacuum pump which is able to keep the vacuum degree of the system in excess of –100.7 kPa (5 torr – 755 mmHg).

■ Differences

• Equipped with function to prevent reverse oil flow
• Previous vacuum pump can be used by installing adapter.

4. Leak tester

■ Specifications
- Hydrogen detecting type, etc.
- Applicable refrigerants
  R-410A, R-407C, R-404A, R-507A, R-134a, etc.

■ Differences
- Previous testers detected chlorine. Since HFCs do not contain chlorine, new tester detects hydrogen.

5. Refrigerant oil (Air compal)

■ Specifications
- Contains synthetic oil, therefore it can be used for piping work of every refrigerant cycle.
- Offers high rust resistance and stability over long period of time.

■ Differences
- Can be used for R-410A and R-22 units.

6. Gauge manifold for R-410A

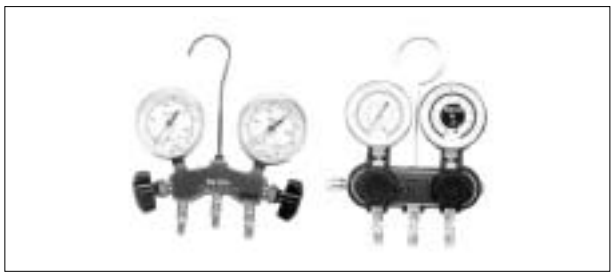

■ Specifications
- High pressure gauge
  - 0.1 to 5.3 MPa (-76 cmHg to 53 kg/cm^2)
- Low pressure gauge
  - 0.1 to 3.8 MPa (-76 cmHg to 38 kg/cm^2)
- 1/4" → 5/16" (2min → 2.5min)
- No oil is used in pressure test of gauges.
  → For prevention of contamination

- Temperature scale indicates the relationship between pressure and temperature in gas saturated state.

■ Differences
- Change in pressure
- Change in service port diameter

7. Charge hose for R-410A

(Hose with ball valve)

■ Specifications
- Working pressure 5.08 MPa (51.8 kg/cm^2)
- Rupture pressure 25.4 MPa (259 kg/cm^2)
- Available with and without hand-operate valve that prevents refrigerant from outflow.

■ Differences
- Pressure proof hose
- Change in service port diameter
- Use of nylon coated material for HFC resistance

8. Charging cylinder

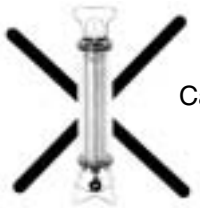

Can not be used

■ Specifications
- Use weigher for refrigerant charge listed below to charge directly from refrigerant cylinder.

■ Differences
- The cylinder can not be used for mixed refrigerant since mixing ratio is changed during charging.

  When R-410A is charged in liquid state using charging cylinder, foaming phenomenon is generated inside charging cylinder.

9. Weigher for refrigerant charge

■ Specifications
- High accuracy
  TA101A (for 10-kg cylinder) = ± 2g
  TA101B (for 20-kg cylinder) = ± 5g
- Equipped with pressure-resistant sight glass to check liquid refrigerant charging.
- A manifold with separate ports for HFCs and previous refrigerants is equipped as standard accessories.

■ Differences
- Measurement is based on weight to prevent change of mixing ratio during charging.

10. Charge mouthpiece

■ Specifications
- For R-410A, 1/4"→ 5/16" (2min → 2.5min)
- Material is changed from CR to H-NBR.

■ Differences
- Change of thread specification on hose connection side (For the R-410A use)
- Change of sealer material for the HFCs use.

Index

A
A0 142
A1 143
A3 144
A6 146
A7 147
A8 149
A9 150
Abnormal Discharge Pipe Temperature 172
Abnormal Power Supply Voltage 149
About Refrigerant R-410A 258
Actuation of High Pressure Switch 164
Actuation of Low Pressure Sensor 166
Address Duplication of Central Remote Control ..201
Address Duplication, Improper Setting 210
AF 152
AJ 153
Applicable range of Field setting 92

C
C1 154
C4 156
C5 157
C6 158
C9 159
CA 160
CC 161
Centralized Control Group No. Setting 100
Check for causes of drop in low pressure 218
Check for causes of rise in high pressure 217
Check Operation 82
Check Operation not Executed 193
CJ 162
Compressor PI Control 50
Contents of Control Modes 102
Cool / Heat Mode Switching 113
Cooling Operation Fan Control 52

D
Defrosting Operation 56
Demand Operation 64
Detailed Explanation of Setting Modes 93
Discharge Pipe Protection Control 62
Display “Under Host Computer Integrate Control” Blinks (Repeats Double Blink) 216
Display “Under Host Computer Integrate Control” Blinks (Repeats Single Blink) 213
Drain Level above Limit 152
Drain Pump Control 65

E
E1 163
E3 164
E4 166
E5 168
E7 169
E9 170
Electrical and Functional Parts
Outdoor Unit 30
Electronic Expansion Valve PI Control 51
Error of External Protection Device 142
Excessive Number of Indoor Units 200

F
F3 172
F6 173
Failure of Combination (Between Indoor unit PC Board and Fan PC Board) 158
Failure of Transmission (Between Indoor unit PC Board and Fan PC Board) 154
Fan Motor (M1F) Lock, Overload 146
Field Setting 87
Field Setting from Outdoor Unit 104
Field Setting from Remote Control 87
Freeze Prevention 70
Functional Parts Layout 44

H
H9 174
Heating Operation Prohibition 64
High Pressure Protection Control 60
High Voltage of Capacitor in Main Inverter Circuit 188

I
Improper Combination of Optional Controllers for Centralized Control 208
Inverter Compressor Abnormal 184
Inverter Compressor Motor Lock 168
Inverter Current Abnormal 185
Inverter Protection Control 63
Inverter Start up Error 186

J
J3 175
J5 176
J6 177
J7 178
J9 179
JA 180
JC 181

L
L1 182
L4 183
L5 184
L8 185
L9 186
LC 187
List of Electrical and Functional Parts
Indoor Unit 32
Louver Control for Preventing Ceiling Dirt 67
Low Pressure Drop Due to Refrigerant Shortage or Electronic Expansion Valve Failure 189
Low Pressure Protection Control 61

M

M1 206
M8 207
MA 208
Malfunction code indication by outdoor unit PC board 138
Malfunction of Capacity Determination Device 153
Malfunction of Discharge Pipe Thermistor (R2T) .175
Malfunction of Drain Level Control System (S1L) 144
Malfunction of High Pressure Sensor 180
Malfunction of Humidity Sensor System 161
Malfunction of Inverter Radiating Fin Temperature Rise 183
Malfunction of Low Pressure Sensor 181
Malfunction of Moving Part of Electronic Expansion Valve (Y1E) 150
Malfunction of Moving Part of Electronic Expansion Valve (Y1E, Y3E) 170
Malfunction of Outdoor Unit Fan Motor 169
Malfunction of PC Board 182
Malfunction of Swing Flap Motor (M1S) 147
Malfunction of System, Refrigerant System Address Undefined 204
Malfunction of Thermistor (R1T) for Suction Air ...159
Malfunction of Thermistor (R2T) for Heat Exchanger 156
Malfunction of Thermistor (R3T) for Gas Pipes 157
Malfunction of Thermistor (R3T, R5T) for Suction Pipe 1, 2 176
Malfunction of Thermistor (R4T) 179
Malfunction of Thermistor (R6T) 177
Malfunction of Thermistor (R7T) for Outdoor Unit Liquid Pipe 178
Malfunction of Thermistor for Discharge Air 160
Malfunction of Thermostat Sensor in Remote Control 162
Malfunction of Transmission between Central Remote Control and Indoor Unit 202
Malfunction of Transmission between Centralized Remote Control and Indoor Unit 205
Malfunction of Transmission between Indoor and Outdoor Units in the Same System 198
Malfunction of Transmission between Indoor Units and Outdoor Units 194
Malfunction of Transmission between Inverter and Control PC Board 187
Malfunction of Transmission between Main and Sub Remote Controls 197
Malfunction of Transmission between Optional Controllers for Centralized Control 207
Malfunction of Transmission between Remote Control and Indoor Unit 196
MC 210
Method of Replacing The Inverter's Power Transistors and Diode Modules 254

N

Normal Operation 49

O

Oil Return Operation 54
Operation Lamp Blinks 211
Operation Mode 48
Operation when Power is Turned On 85
Option List 246
Outdoor Unit PC Board Layout 86
Outdoor Unit Thermistors for Discharge Pipe 252

P

P1 188
PC Board Defect 143, 163, 206
Power Supply Insufficient or Instantaneous Failure .. 191
Precautions for New Refrigerant (R-410A) 258
Pressure Sensor 253
Protection Control 60
Pump-down Residual Operation 57

R

Refrigerant Circuit 40
Refrigerant Cylinders 260
Refrigerant Overcharged 173
Restart Standby 58

S

Service Tools 261
Setting by Dip Switches 104
Setting by pushbutton switches 106
Setting of Low Noise Operation and Demand Operation 115
Setting of Refrigerant Additional Charging Operation 119
Special Control 53
Specifications 6
Startup Control 53
Stopping Operation 59
Swing Flaps 71
Symptom-based Troubleshooting 125
System is not Set yet 203

T

Test Operation
Procedure and Outline 74
Thermistor Resistance / Temperature Characteristics 251
Thermostat Sensor in Remote Control 68

U

U0 189
U2 191
U3 193
U4 194
U5 196
U8 197
U9 198
UA 200
UC 201
UE 202, 205
UF 203
UH 204

Drawings & Flow Charts

A
abnormal discharge pipe temperature 172
abnormal power supply voltage 149
actuation of high pressure switch 164
actuation of low pressure sensor 166
address duplication of central remote control 201
address duplication, improper setting 210

C
centralized control group no. setting 100
brc1c type 100
brc4 type 101
brc7 type 101
group no. setting example 101
check for causes of drop in low pressure 218
check for causes of rise in high pressure 217
check for fan motor connector 219
check operation 82
check operation not executed 193
check work prior to turn power supply on 74
compressor motor lock 168
contents of control modes 102
how to select operation mode 103
cooling operation fan control 52

D
display “under host computer integrate control” blinks (repeats double blink) 216
display “under host computer integrate control” blinks (repeats single blink) 213
display of sensor and address data 134
drain level above limit 152
drain pump control 65
when the float switch is tripped and “af” is displayed on the remote control 66
when the float switch is tripped during heating operation 66
when the float switch is tripped while the cooling thermostat is off 65
when the float switch is tripped while the cooling thermostat is on 65

E
error of external protection device 142
excessive number of indoor units 200

F
failure of combination (between indoor unit pc board and fan pc board) 158
failure of transmission (between indoor unit pc board and fan pc board) 154
fan motor (m1f) lock, overload 146
freeze prevention 70
functional parts layout 44

H
high pressure protection control 60
high voltage of capacitor in main inverter circuit . 188

I
improper combination of optional controllers for centralized control 208
inverter compressor abnormal 184
inverter current abnormal 185
inverter protection control 63
inverter start up error 186

L
louver control for preventing ceiling dirt 67
low pressure drop due to refrigerant shortage or electronic expansion valve failure 189
low pressure protection control 61

M
malfunction of capacity determination device 153
malfunction of discharge pipe thermistor (r2t) 175
malfunction of drain level control system (s1l) 144
malfunction of high pressure sensor 180
malfunction of humidity sensor system 161
malfunction of inverter radiating fin temperature rise 183
malfunction of low pressure sensor 181
malfunction of moving part of electronic expansion valve (20e) 150
malfunction of moving part of electronic expansion valve (y1e, y3e) 170
malfunction of outdoor unit fan motor 169
malfunction of swing flap motor (ma) 147
malfunction of system, refrigerant system address undefined 204
malfunction of thermistor (r1t) for outdoor air 174
malfunction of thermistor (r1t) for suction air 159
malfunction of thermistor (r2t) for heat exchanger 156
malfunction of thermistor (r3t) for gas pipes 157
malfunction of thermistor (r3t, r5t) for suction pipe 1, 2 176
malfunction of thermistor (r4t) 179
malfunction of thermistor (r6t) 177
malfunction of thermistor (r7t) for outdoor unit liquid pipe 178
malfunction of thermistor for discharge air 160
malfunction of thermostat sensor in remote control .. 162
malfunction of transmission between central remote control and indoor unit 202
malfunction of transmission between centralized remote control and indoor unit 205
malfunction of transmission between indoor and outdoor units in the same system 198

malfunction of transmission between indoor units and outdoor units 194
malfunction of transmission between inverter and control pc board 187
malfunction of transmission between main and sub remote controls 197
malfunction of transmission between optional controllers for centralized control 207
malfunction of transmission between remote control and indoor unit 196
method of replacing the inverter's power transistors modules 254

O

operation lamp blinks 211
operation mode 48
operation of the remote control's inspection / test operation button 132
outdoor unit pc board layout 86

P

pc board defect 143, 163, 206
piping diagrams 222
power supply insufficient or instantaneous failure 191
pressure sensor 253

R

refrigerant circuit 40
refrigerant overcharged 173
remote control self-diagnosis function 135
remote control service mode 133

S

self-diagnosis by wired remote control 129
self-diagnosis by wireless remote control 130
setting of low noise operation and demand operation 115
image of operation 116
setting of refrigerant additional charging operation 119
check operation 121
simplified remote control 90
brc2c51 90
system is not set yet 203

T

thermostat sensor in remote control 68
cooling 68
heating 69
torque wrench 263
troubleshooting by remote control 128
turn power on 74

W

weigher for refrigerant charge 266
wired remote control 87
wireless remote control - indoor unit 89
brc4 type 89
brc7 type 89
wiring diagrams 227

In all of us,
a green heart

Daikin's unique position as a manufacturer of air conditioning equipment, compressors and refrigerants has led to its close involvement in environmental issues. For several years Daikin has had the intension to become a leader in the provision of products that have limited impact on the environment. This challenge demands the eco design and development of a wide range of products and an energy management system, resulting in energy conservation and a reduction of waste.

Daikin Europe N.V. is approved by LRQA for its Quality Management System in accordance with the ISO9001 standard. ISO9001 pertains to quality assurance regarding design, development, manufacturing as well as to services related to the product.

ISO14001 assures an effective environmental management system in order to help protect human health and the environment from the potential impact of our activities, products and services and to assist in maintaining and improving the quality of the environment.

Daikin units comply with the European regulations that guarantee the safety of the product.

VRV products are not within the scope of the Eurovent certification programme.

The present publication is drawn up by way of information only and does not constitute an offer binding upon Daikin Europe N.V.. Daikin Europe N.V. has compiled the content of this publication to the best of its knowledge. No express or implied warranty is given for the completeness, accuracy, reliability or fitness for particular purpose of its content and the products and services presented therein. Specifications are subject to change without prior notice. Daikin Europe N.V. explicitly rejects any liability for any direct or indirect damage, in the broadest sense, arising from or related to the use and/or interpretation of this publication. All content is copyrighted by Daikin Europe N.V..

DAIKIN EUROPE N.V.
Naamloze Vennootschap
Zandvoordestraat 300
B-8400 Oostende - Belgium
www.daikin.eu
BTW: BE 0412 120 336
RPR Oostende

SiENBE34-802 • 04/2009 • Copyright © Daikin
Prepared in Belgium by Lannoo (www.lannooprint.be), a company whose concern for the environment is set in the EMAS and ISO 14001 systems.
Responsible Editor: Daikin Europe N.V., Zandvoordestraat 300, B- 8400 Oostende

SiENBE34-802